BRAKE PACK

INDEX

CHARACTERISTICS OF BRAKE PACK 286

CONTACT TYPE 288

NON-CONTACT TYPE 299

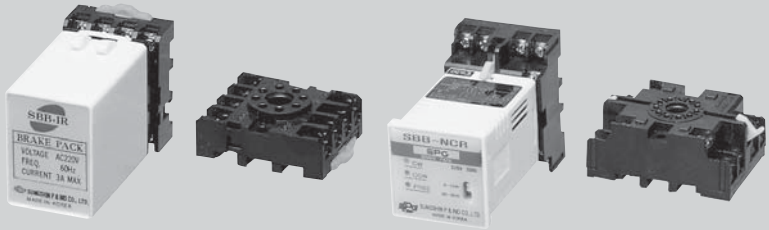

CODING SYSTEM

MOTOR

MAKER	SIZE	MOTOR TYPE	OUTPUT	SHAFT TYPE	VOLTAGE	GEAR TYPE		SPECIAL TYPE
S	9	I	40	G	B	H	-	E

S : SPG Co., Ltd.

6 : □60(㎜)
7 : □70(㎜)
8 : □80(㎜)
9 : □90(㎜)

I : Induction Motor
R : Reversible Motor

03 : 3W **90** : 90W
06 : 6W **120** : 120W
15 : 15W **150** : 150W
25 : 25W **180** : 180W
40 : 40W **200** : 200W
60 : 60W

G : Gear Type
S : Straight Type
D : D-Cut Type
K : Key Type

A : 1ØAC 110V 60Hz (4Pole)
B : 1ØAC 220V 60Hz (4Pole)
C : 1ØAC 100V 50/60Hz (4Pole)
D : 1ØAC 200V 50/60Hz (4Pole)
E : 1ØAC 115V 60Hz (4Pole)
X : 1ØAC 220~240V 50Hz (4Pole)
U : 3ØAC 200V 50/60Hz (4Pole)
T : 3ØAC 220V 50/60Hz (4Pole)
S : 3ØAC 380~440V 50/60Hz (4Pole)

H : Heavy Impact
L : Light Impact

E : Electro-magnetic Brake Type
T : Terminal Box Type(Terminal Block Type)
T1 : Terminal Box Type(PCB Type Terminal Block) (25~90W)
T2 : Conduit Box Type(25~90W)
B : Semi-Brake Type
S : Variable Speed Control(Pack Type)
S12 : T.G Voltage 12V Type
S24 : T.G Voltage 24V Type
V : Variable Speed Control(Unit Type)
V12 : T.G Voltage 12V Type
ES : Electro-Magnetic Brake
Variable Speed Control(Pack Type)
ES12 : T.G Voltage 12V Type
ES24 : T.G Voltage 24V Type

※ NOTE 1) 'H' & 'L' type are applied to over 40W.
• 'H' type is the standard for over 60W.
• 'L' type is the standard for over 40W.
※ NOTE 2) Key Type are applied to over □80 15W

SPEED CONTROLLER (SR PACK TYPE)

CONTROLLER TYPE	VOLTAGE	OUTPUT
SR	B	01

01 : 6W
02 : 15W~90W

A : 1Ø AC110V 60Hz (4Pole)
B : 1Ø AC220V 60Hz (4Pole)
C : 1Ø AC100V 50/60Hz (4Pole)
D : 1Ø AC200V 50/60Hz (4Pole)
E : 1Ø AC115V 60Hz (4Pole)
X : 1Ø AC220~240V 50Hz (4Pole)

SR SERIES
※ NOTE) The applicable motor is for T.G. 12V.

SPEED CONTROLLER (SS PACK TYPE)

CONTROLLER TYPE	VOLTAGE	OUTPUT		RUN / STOP TYPE
SS	B	01	-	SRSS

Slow Run Slow Stop

01 : 6W(Standard Type)
02 : 15W~40W(Standard Type)
03 : 6W~90W(High Output Type)

A : 1Ø AC110V 60Hz (4Pole)
B : 1Ø AC220V 60Hz (4Pole)
C : 1Ø AC100V 50/60Hz (4Pole)
D : 1Ø AC200V 50/60Hz (4Pole)
E : 1Ø AC115V 60Hz (4Pole)
X : 1Ø AC220V~240V 50Hz (4Pole)

SS SERIES
※ NOTE) The applicable motor is for T.G. 24V.

SPEED CONTROLLER (UNIT TYPE)

MAKER	CONTROLLER TYPE	OUTPUT	TYPE	VOLTAGE		T.G VOLTAGE
S	U	A	40	I	B	- V12

V12 : T.G Voltage 12V Type

A : 1Ø AC110V 60Hz (4Pole)
B : 1Ø AC220V 60Hz (4Pole)
C : 1Ø AC100V 50/60Hz (4Pole)
D : 1Ø AC200V 50/60Hz (4Pole)
E : 1Ø AC115V 60Hz (4Pole)
X : 1Ø AC220~240V 50Hz (4Pole)

I : Induction Motor
※ NOTE) Unit Type of Speed Controller does not have Reversible Motor.(715 Type : No marking)

06 : 6W **25** : 25W **90** : 90W
715 : 15W(□70) **40** : 40W **120** : 120W
15 : 15W(□80) **60** : 60W **180** : 180W

A : Analogue Type
D : Digital Type

U : Unit Type

S : SPG Co.,Ltd.

BRAKE PACK (CONTACT TYPE)

BRAKE TYPE	VOLTAGE		MOTOR TYPE
SB	B	-	IR

IR : 1Ø Motor
I : 3Ø Motor

A : 1Ø AC 110V 60Hz (4Pole)
B : 1Ø AC 220V 60Hz (4Pole)
C : 1Ø AC 100V 50/60Hz (4Pole)
D : 1Ø AC 200V 50/60Hz (4Pole)
X : 1Ø AC 220~240V 50Hz (4Pole)
U : 3Ø AC 200V 50/60Hz (4Pole)
T : 3Ø AC 220V 50/60Hz (4Pole)
S : 3Ø AC 380~440V 50/60Hz (4Pole)

SB SERIES

GEAR HEAD

MAKER	SIZE	SHAFT TYPE	OUTPUT	GEAR RATIO	BEARING TYPE	SHAFT IMPACT TYPE		SPECIAL TYPE
S	9	K	C	36	B	H	-	S

S : Flange Type

※
H : Heavy Impact
L : Light Impact

B : Ball bearing + Metal bearing(6W~40W)
All Ball bearing(60W MIN)
B1 : All Ball bearing(6W~40W)
M : Metal bearing(6W~40W)

Reduction Ratio(36:1/36)

T : 3W **C** : 60W~120W
A : 6W~ 25W **D** : 60W~120W
B : 40W **H** : 150W~200W

S : Straight Type
D : D-Cut Type
K : Key Type

6 : □60(㎜)
7 : □70(㎜)
8 : □80(㎜)
9 : □90(㎜)

※ NOTE) 'H' & 'L' type are applied to over 40W.
• 'H' type is the standard for over 60W.
• 'L' type is the standard for over 40W.

S : SPG Co.,Ltd.

BRAKE PACK (NON CONTACT TYPE)

BRAKE TYPE	VOLTAGE		
SB	B	-	NCR

NCR : Non Contact Relay
ENCR : Brake type Non Contact Relay

A : 1Ø AC 110V 60Hz (4Pole)
B : 1Ø AC 220V 60Hz (4Pole)
C : 1Ø AC 100V 50/60Hz (4Pole)
D : 1Ø AC 200V 50/60Hz (4Pole)
X : 1Ø AC 220V~240V 50Hz (4Pole)

SB SERIES

BRAKE PACK

1. Characteristics of Brake Pack

1) The electronic brake can stop the motor instantaneously.
   - The motor stops instantaneously within 0.1 second.
   - The braking current flows for about 0.4 seconds. Afterwards, the motor's power source shuts off automatically. (The brake pack has no holding torque.)
2) This is an electronic circuit that is used as an instant stop brake when used with induction motors and is also used as an instant reversible brake pack when used with reversible motors.
3) Unlike mechanical brakes (electromagnetic brakes), an electronic brake does not have a mechanical friction point, therefore has longer life cycle and stronger breaking torque. Thus it is suitable for the inching operation of the motor.

2. Usage of Brake Pack

(1) How to Change Rotational Direction of Motor

1) When changing the rotational direction of the induction motor, the stoppage of the motor must be confirmed before changing the rotational direction.
2) When changing the rotational direction of the three-phase induction motor, the stoppage of the motor must be confirmed before changing the rotational direction.
   The power source T is fixed and does not change.
3) When stopping the motor instantaneously by using the brake pack, a large surge of braking current occurs for about 0.4 seconds. At this time, if an attempt is made to change the rotational direction of the motor, the big sparks are generated between the relay contact points, reducing the life cycle of the motor.Therefore, do not attempt to change the rotational direction of the motor for 0.5 seconds after the motor is stopped instantaneously.

(2) Use of Power Relay

1) If the brake pack with a contact point is going to be used, the power relay ils required to switch between operation and brake. When opening and closing the power relay, the sparks are generated between contact points, either reducing the life cycle or causing the radio noise interference.
2) In such a case, use a CR circuit to absorb the surge voltage occurred between the relay contact points.
3) If the CR circuit for absorbing the surge voltage is connected and employed, the fluctuation of spark voltage and frequency is alleviated, preventing both weakening of the contact points and interfering of the radio noise.
4) When used with reversible motors, use CR circuit to absorb surge voltage to protect the contact point of the switch used to change the rotational direction.

(3) FUSE

1) When stopping the motor instantaneously with the brake pack, a large surge of current occurs for about 0.4 seconds.
2) Therefore, when connecting the fuse to the power switch, check the breaking current value and use the appropriate quantity of the fuse.
3) To find out the braking current value of the corresponding motor, refer to the specifications of each brake pack.

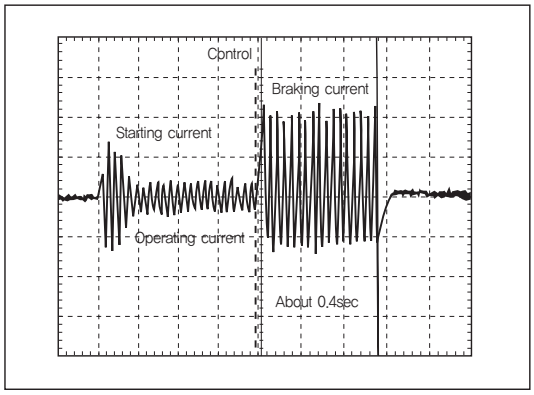

(4) Motor Temperature Rise and Maximum Continuous Operation

1) Even if the brake pack is adjusted to a short cycle, the motor can make an accurate stop instantaneously.
2) Shorter the operation cycle, higher the the temperture rises. So the limitation must be given for the continuous operation.
3) Stopping and starting the motor makes the current flow more frequently compared to a rated operation resulting in a faster increase of the motor temperature.
4) Thus if it is operated for shot cycle, be careful with the temperature increase.
5) Make sure to keep the temperature of the motor's housing surface 90℃ or less while the motor is operating.

(5) Noise Solution

1) When using the motor in a place where a large external noise may occur due to opening and closing of a large power, such noise may cause the thyristor to malfunction and the motor may vibrate when it stops.
2) The source of such noise includes high-powered motors, solenoid, high frequency quencher, and electrical welding machine.

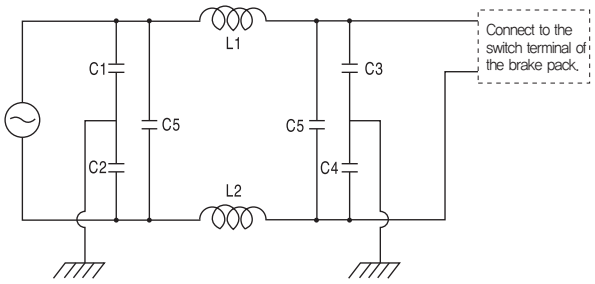

3) One effective solution to the external noise problem is to connect the noise filter to the power line of the brake pack as shown in the figure.
4) The brake pack SBS-ICE type has a built-in filter to address the noise problem associated with the power source line.
5) Also, when stopping the motor instantaneously with the brake pack, a little radio noise may be experienced because the braking current is controlled by the phase.
It is recommended to connect the noise filter as shown in the figure above, because it gives minimal influence on the other device.

3. Cautions for Using Brake Pack

(1) Installation

1) Use it in a place where an ambient temperature ranges from 0℃ to +40℃ and an ambient humidity is less than 85%.
2) Avoid direct sunlight, moistened or oily place. If the motor is going to be used in such a place, install a cover for it.
3) Avoid places with vibrations, shocks, a lot of dusts, flammable or caustic gas, and the like.

(2) Wiring

1) Connection socket must be used and do not directly solder the main body.
2) Check the terminal number when connecting the socket.
3) When inserting the brake pack into the socket groove, turn off the power and check the pin number before inserting.
4) When connecting the noise filter, install it as close as possible to the brake pack. Do not forget to ground the earth terminal.
5) The wiring for the switching signal between operating and braking should be short, separating it from the motor lead line or any other power line.

(3) Others

1) If the motor is actually loaded, use the motor while its surface temperature is 90℃ or less. Especially, frequent repetition of instantaneous stop and start increases the motor temperature.
2) If the motor is not going to run for a long period of time, turn the power source off.
3) Do not use AC power source to start or stop the motor.
The surge voltage generated from the switch may damage the product.

BRAKE PACK
: CONTACT TYPE

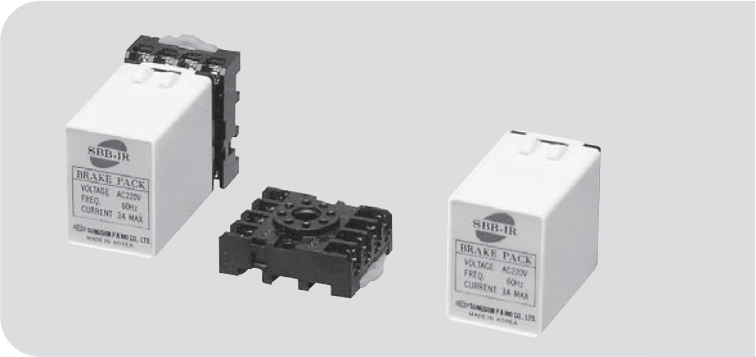

✚ DIMENSIONS

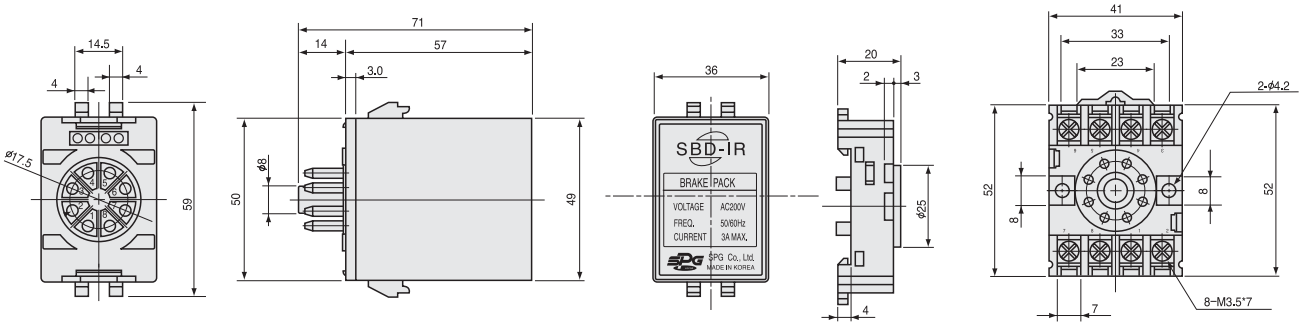

❖ BREAK PACK is an electronic braking circuit to stop single and three phase motor instantaneously.
❖ Applicable to inching, etc, since it can give a dynamical braking function at short cycle.

1 SBA-IR, SBC-IR

SPECIFICATION

MODEL	SBA-IR	SBC-IR
Voltage & Frequency	Single - phas 110V±10%, 60Hz	Single - phas 100V±10%, 50/60Hz
Applicated Motor	● INDUCTION MOTOR 90W or less (external resistance needed for operating 90W) ● REVERSIBLE MOTOR 60W or less (external resistance needed for operating 60W)	
Permissible Braking	3A or less	
Braking Current Time	About 0.4sec	
Ambient Temp	-10℃~+50℃	
Ambient Humidity	85% or less (No condensing)	
Insulation Resistance	100MΩ or more when 500V DC megger is applied between the power terminal and signal input terminal at ambient temperature and humidity after brake pack	
Dielectric Strength	Sufficient to withstand 1500V 50/60Hz applied between the power terminal and signal input terminal at ambient temperature and humidity after brake pack running at rated speed for 1mi	

1. Connections differ with types and output power of the motors.
   - A Diagram : Motors with output power 25W or less.
   - B Diagram : Motors with output power 40W ~ 60W.
   - B Diagram + External Resistor 30Ω 50W : 90W induction motor, 60W reversible motor.
2. Be careful since there is high voltage on some terminals.

✚ SCHEMATIC DIAGRAM OF INDUCTION MOTOR

▼ A Diagram

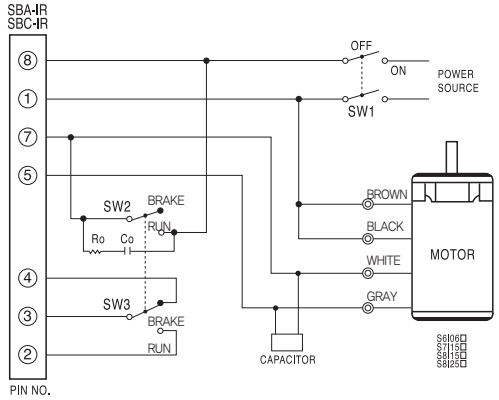

▼ B Diagram

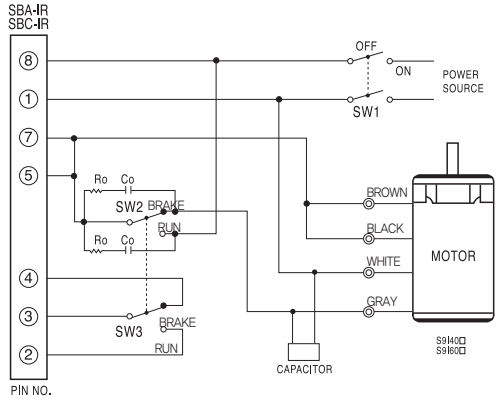

▼ B Diagram + External Resistor 30Ω 50W

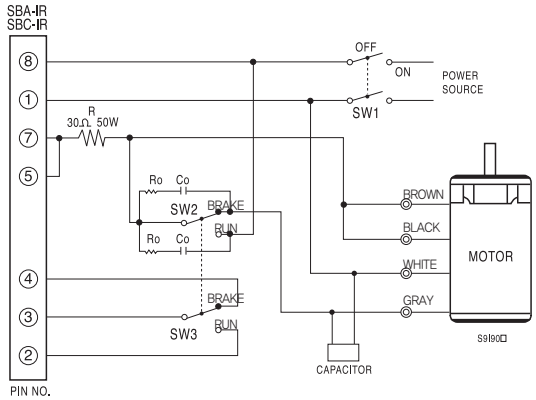

■ The capacity(50W) of braking external resistance is to brake once every 10seconds. When the motor is operated in a shorter cycle bigger capacity is required.

SWITCH NO.	SWITCH CONTACT	REMARK
SW1	AC 125V 5A or more	
SW2	AC 125V 5A or more	Should be operating at same time
SW3	DC 20V 10mA	
R : braking current	30Ω 50W (EXTERNAL RESISTOR FOR BRAKING)	B DIAGRAM+EXTERNAL RESISTOR 30Ω50W
Ro,Co (SPARK KILLER)	Ro=5~200Ω Co=0.1~0.2μF 125WV	

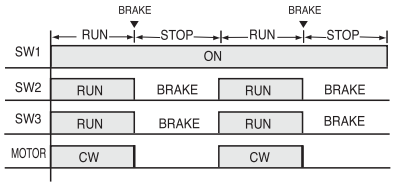

OPERATION/INSTANTANEOUS STOP

■ When switch SW2, SW3 are flipped to "RUN", the motor begins to rotate. When these switches are flipped to "STOP", the motor stops instantaneously. Braking current runs through the motor winding for approximately 0.4 seconds and the power is cut automatically.

DIRECTION OF ROTATION

■ These diagrams all refer CW rotation as viewed from shaft end of the motor. To rotate the motor in a counter clock wise, exchange gray and brown wire. Do not change direction of rotation 0.4 seconds after braking operation.

EXAMPLE OF BRAKING CHARACTERISTIC

Braking characteristics of induction motor are shown as below..

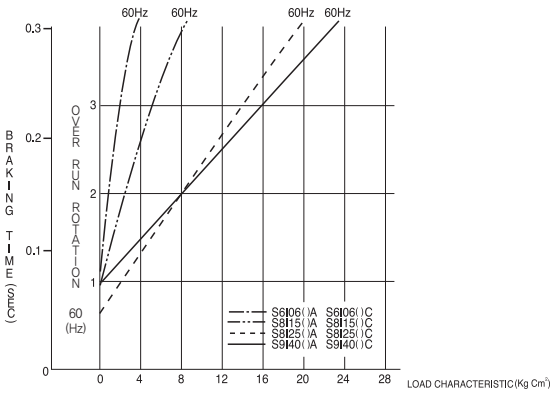

SCHEMATIC DIAGRAM OF REVERSIBLE MOTOR

▼ A Diagram

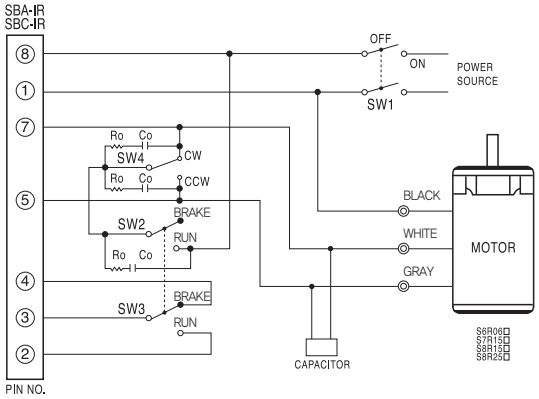

▼ B Diagram

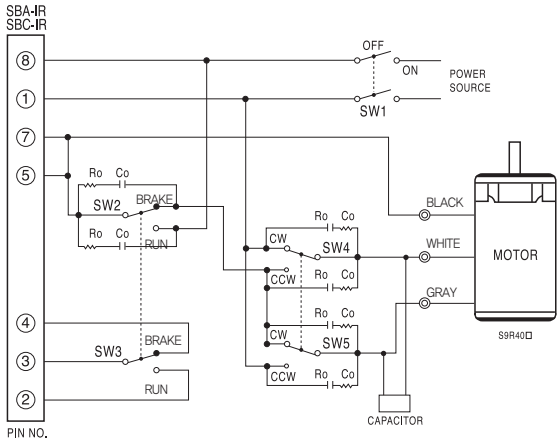

▼ B Diagram + External Resistor 30Ω 50W

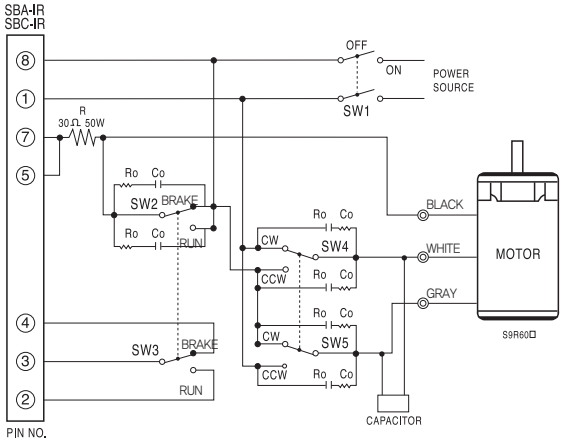

■ The capacity(50W) of braking external resistance is to brake once every 10seconds. When the motor is operated in a shorter cycle bigger capacity is required.

SWITCH NO.	SWITCH CONTACT	REMARK
SW1	AC 125V 5A or more	
SW2	AC 125V 5A or more	Should be operating at same time
SW3	DC 20V 10mA	
SW4, 5	AC 125V 5A or more	
R : braking current	30Ω 50W (EXTERNAL RESISTOR FOR BRAKING)	B DIAGRAM+EXTERNAL RESISTOR 30Ω50W
Ro,Co (SPARK KILLER)	Ro=5~200Ω Co=0.1~0.2μF 125WV	

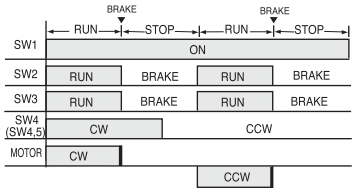

OPERATION/INSTANTANEOUS STOP

■ When switch SW2, SW3 are flipped to "RUN", the motor begins to rotate. When these switches are flipped to "STOP", the motor stops instantaneously. Braking current runs through the motor winding for approximately 0.4 seconds and the power is cut automatically.

DIRECTION OF ROTATION

■ These diagrams all refer clockwise(CW) rotation as viewed from the front shaft end of the motor. Do not reverse the rotation for 0.4sec. after braking. While braking, set SW4, SW5 should be accessed to connect to CW or CCW.

EXAMPLE OF BRAKING CHARACTERISTIC

Braking characteristics of induction motor are shown as below.

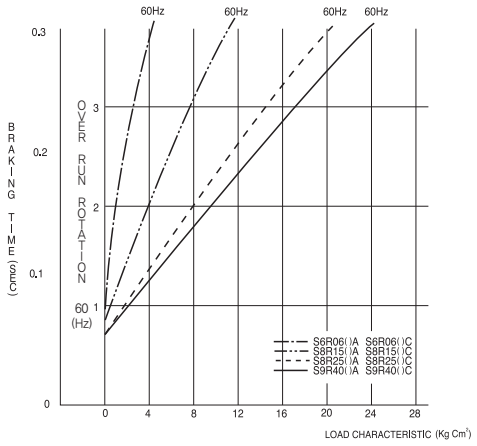

OPERATION CYCLE AND LIMIT FOR CONTINUOUS OPERATION

Even when brake pack SBA-IR or SBC-IR is used in short operating cycles such as inching operation, the motor can be stopped instantaneously.
However, if the motor is operated in a cycle shorter than 0.5sec for running and stopping, this will be like repeating starting and instantaneous stopping, and will cause rise of temperature. The temperature of the motor case should be maintained 90℃ or less regardless of operating cycles.

2 SBB-IR, SBD-IR

SPECIFICATION

MODEL	SBB-IR	SBD-IR
Voltage & Frequency	Single – phas 220V±10%, 60Hz	Single – phas 200V±10%, 50/60Hz
Applicated Motor	● INDUCTION MOTOR 90W or less (external resistance needed for operating 90W) ● REVERSIBLE MOTOR 60W or less	
Permissible Braking	3A and less	
Braking Current Time	About 0.4sec	
Ambient Temp	-10℃~+50℃	
Ambient Humidity	85% or less (No condensing)	
Insulation Resistance	100MΩ or more when 500V DC megger is applied between the power terminal and signal input terminal at ambient temperature and humidity after brake pack	
Dielectric Strength	Sufficient to withstand 1500V 50/60Hz applied between the power terminal and signal input terminal at ambient temperature and humidity after brake pack running at rated speed for 1min	

1. Connections differ with types and output power of the motors.
   - A Diagram : Motors with output power 25W or less • B Diagram : Motors with output power 40W ~ 60W.
   - B connection and external braking resistor with external resistance of 50Ω 20W is required for motors over 60W
2. Be careful since there is high voltage on some terminals.

✚ SCHEMATIC DIAGRAM OF INDUCTION MOTOR

▼ A Diagram

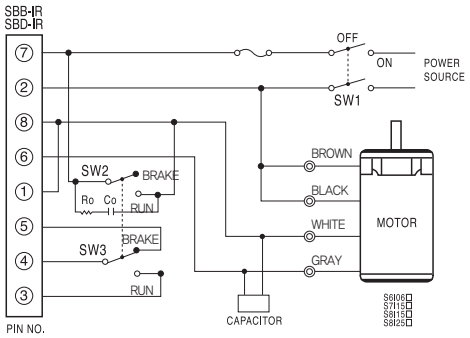

▼ B Diagram

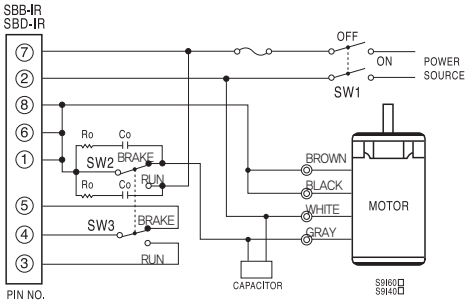

■ The capacity(20W) of braking external resistance is to brake once every 10seconds. When the motor is operated in a shorter cycle bigger capacity is Required.

SWITCH NO.	SWITCH CONTACT	REMARK
SW1	AC 125V 5A or more	
SW2	AC 125V 5A or more	Should be operating at same time
SW3	DC 20V 10mA	
R : braking current	50Ω 20W (EXTERNAL RESISTOR FOR BRAKING)	B DIAGRAM+EXTERNAL RESISTOR 30Ω/50W
Ro,Co (SPARK KILLER)	Ro=5~200Ω Co=0.1~0.2μF 125WV	

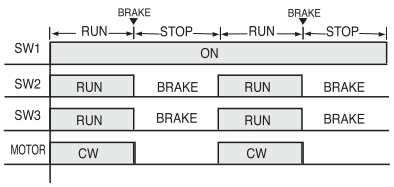

OPERATION/INSTANTANEOUS STOP

■ When switch SW2, SW3 are flipped to "RUN", the motor begins to rotate. When these switches are flipped to "STOP", the motor stops instantaneously. Braking current runs through the motor winding for approximately 0.4 seconds and the power is cut automatically.

DIRECTION OF ROTATION

■ These diagrams all refer clockwise(CW) rotation as viewed from the front shaft end of the motor. To rotate counter-clockwise(CCW), change gray wire to brown. Do not reverse the rotation for 0.4sec. after braking.

▼ B Diagram + External Resistor 50Ω 20W

■ The capacity(20W) of braking external resistance is to brake once every 10 seconds. When the motor is operated in a shorter cycle bigger capacity is required.

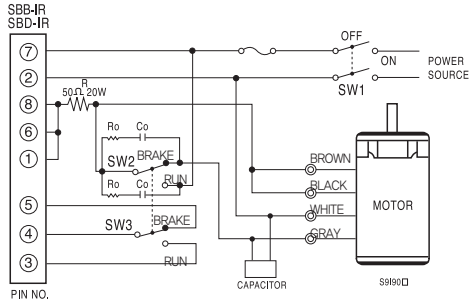

EXAMPLE OF BRAKING CHARACTERISTIC

Braking characteristics of induction motor are shown as below.

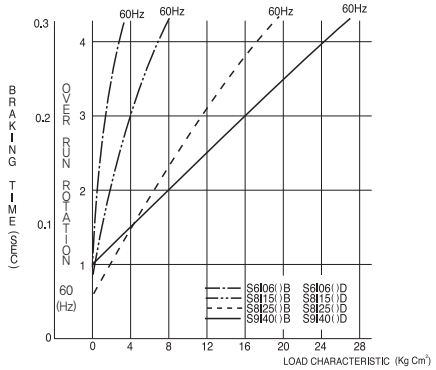

✚ SCHEMATIC DIAGRAM OF REVERSIBLE MOTOR

▼ A Diagram

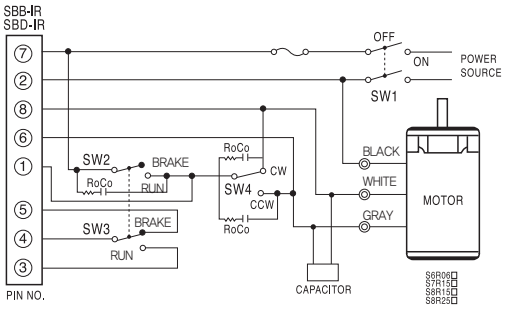

▼ B Diagram

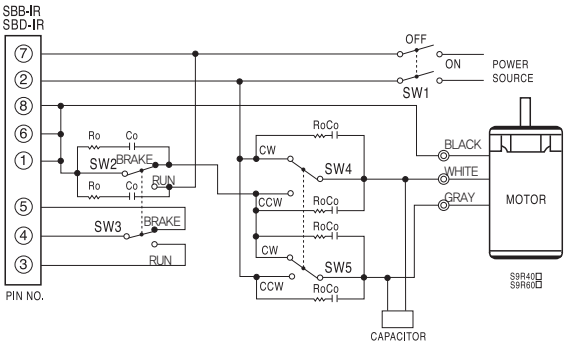

SWITCH NO.	SWITCH CONTACT	REMARK
SW1	AC 250V 5A or more	
SW2	AC 250V 5A or more	Should be operating at same time
SW3	DC 20V 10mA	
SW4, 5	AC 250V 5A or more	
Ro,Co (SPARK KILLER)	Co = 0.1~0.2μF 125WV	

RUN/INSTANTANEOUS STOP

■ When switch SW2, SW3 are flipped to "RUN", the motor begins to rotate. When these switches are flipped to "STOP", the motor stops instantaneously. Braking current runs through the motor winding for approximately 0.4 seconds and the power is cut automatically.

DIRECTION OF ROTATION

■ These diagrams all refer clockwise(CW) rotation as viewed from the front shaft end of the motor. Do not reverse the rotation for 0.4sec. after braking. While braking, set SW4 SW5 to be accessible to connect to CW or CCW.

EXAMPLE OF BRAKING CHARACTERISTIC

Braking characteristics of induction motor are shown as below.

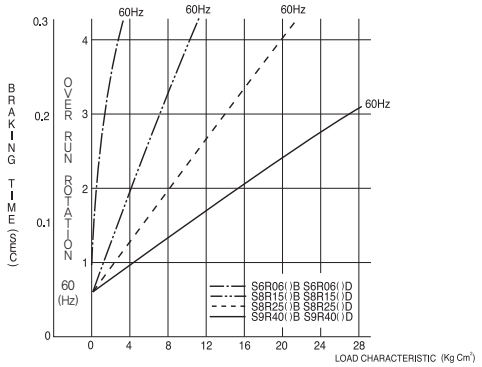

OPERATION CYCLE AND LIMIT FOR CONTINUOUS OPERATION

Even when brake pack SBB-IR or SBD-IR is used in short operating cycles such as inching operation, the motor can be stopped instantaneously. However, if the motor is operated in a cycle shorter than 0.5sec for running and stopping, this will be like repeating starting and instantaneous stopping, and will cause rise of temperature. The temperature of the motor case should be maintained 90℃ or less regardless of operating cycles.

3 SBX - IR

SPECIFICATION

MODEL	SBX-IR
Voltage & Frequency	Single – phas 200~240V, 50Hz
Applicated Motor	● INDUCTION MOTOR 90W or less (external resistance needed for operating 90W) ● REVERSIBLE MOTOR 60W or less
Permissible Braking	3A or less
Braking Current Time	About 0.4sec
Ambient Temp	–10℃~+50℃
Ambient Humidity	85% or less (No condensing)
Insulation Resistance	100㏁ or more when 500V DC megger is applied between the power terminal and signal input terminal at ambient temperature and humidity after brake pack
Dielectric Strength	Sufficient to withstand 1500V 50/60㎐ applied between the power terminal and signal input terminal at ambient temperature and humidity after brake pack running at rated speed for 1min

1. Connections differ with types and output power of the motors.
   - A Diagram : Motors with output power 25W or less
   - B Diagram : Motors with output power 40W ~ 60W.
   - B connection and external braking resistor with external resistance of 50Ω 20W is required for motors over 60W
2. Be careful since there is high voltage on some terminals.

✚ SCHEMATIC DIAGRAM OF INDUCTION MOTOR

▼ A Diagram

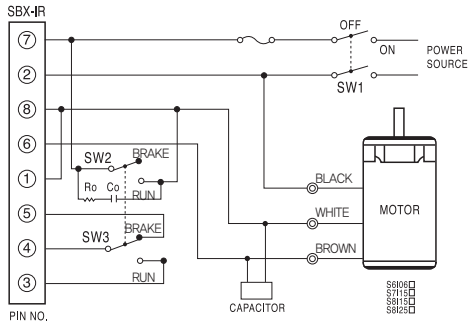

▼ B Diagram

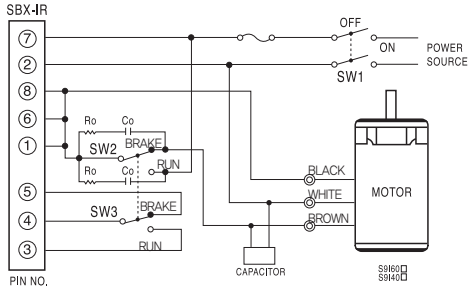

■ The capacity(20W) of braking external resistance is to brake once every 10seconds. When the motor is operated in a shorter cycle bigger capacity is required.

SWITCH NO.	SWITCH CONTACT	REMARK
SW1	AC 250V 5A or more	
SW2	AC 250V 5A or more	Should be operating at same time
SW3	DC 20V 10mA	
R : braking current	50Ω 20W (EXTERNAL RESISTOR FOR BRAKING)	B DIAGRAM-EXTERNAL RESISTOR 30Ω250W
Ro,Co (SPARK KILLER)	Ro=5~200Ω Co=0.1~0.2㎌ 125WV	

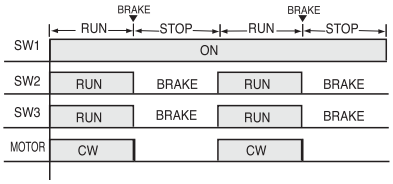

OPERATION/INSTANTANEOUS STOP

■ When switch SW2, SW3 are flipped to "RUN", the motor begins to rotate. When these switches are flipped to "STOP", the motor stops instantaneously. Braking current runs through the motor winding for approximately 0.4 seconds and the power is cut automatically.

DIRECTION OF ROTATION

■ These diagrams all refer clockwise(CW) rotation as viewed from the front shaft end of the motor. To rotate counter-clockwise(CCW), change gray wire to brown. Do not reverse the rotation for 0.4sec. after braking.

▼ B Diagram + External Resistor 50Ω 20W

■ The capacity(20W) of braking external resistance is to brake once every 10 seconds. When the motor is operated in a shorter cycle bigger capacity is required.

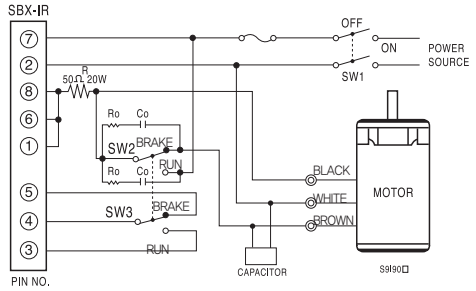

EXAMPLE OF BRAKING CHARACTERISTIC

Braking characteristics of induction motor are shown as below.

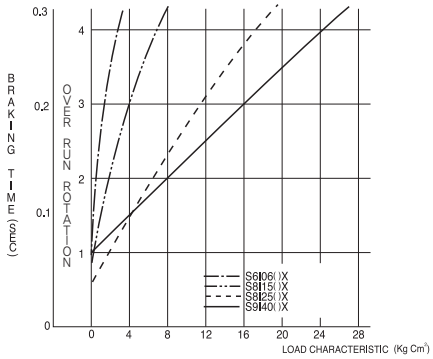

✚ SCHEMATIC DIAGRAM OF REVERSIBLE MOTOR

▼ A Diagram

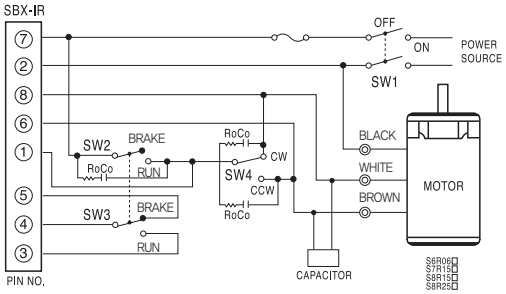

▼ B Diagram

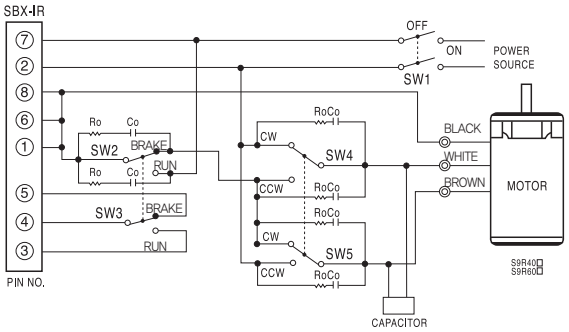

SWITCH NO.	SWITCH CONTACT	REMARK
SW1	AC 250V 5A or more	
SW2	AC 250V 5A or more	Should be operating at same time
SW3	DC 20V 10mA	
SW4, 5	AC 250V 5A or more	
Ro,Co (SPARK KILLER)	Co = 0.1~0.2μF 125WV	

RUN/INSTANTANEOUS STOP

■ When switch SW2, SW3 are flipped to "RUN", the motor begins to rotate. When these switches are flipped to "STOP", the motor stops instantaneously. Braking current runs through the motor winding for approximately 0.4 seconds and the power is cut automatically.

DIRECTION OF ROTATION

■ These diagrams all refer clockwise(CW) rotation as viewed from the front shaft end of the motor. Do not reverse the rotation for 0.4sec. after braking. While braking, set SW4 SW5 to be accessible to connect to CW or CCW.

EXAMPLE OF BRAKING CHARACTERISTIC

Braking characteristics of induction motor are shown as below.

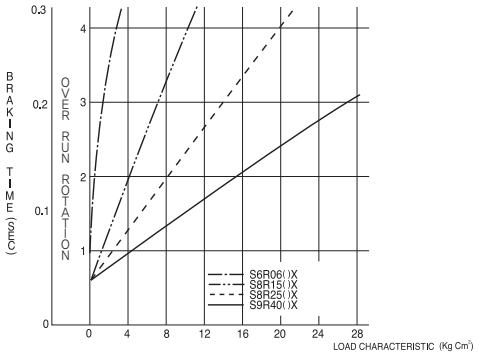

OPERATION CYCLE AND LIMIT FOR CONTINUOUS OPERATION

Even when brake pack SBX – IR is used in short operating cycles such as inching operation, the motor can be stopped instantaneously. However, if the motor is operated in a cycle shorter than 0.5sec for running and stopping, this will be like repeating starting and instantaneous stopping, and will cause rise of temperature. The temperature of the motor case should be maintained 90℃ or less regardless of operating cycles.

4 SBU-I, SBT-I

SPECIFICATION

MODEL	SBU-IR	SBT-IR
Voltage & Frequency	Three phase 200V±10%, 50/60Hz	Three phase 220V±10%, 50/60Hz
Applicated Motor	● INDUCTION MOTOR 90W or less (external resistance needed for operating 60w~90W)	
Permissible Braking	3A or less	
Braking Current Time	About 0.4sec	
Ambient Temp	-10℃~+50℃	
Ambient Humidity	85% or less (No condensing)	
Insulation Resistance	100MΩ or more when 500V DC megger is applied between the power terminal and signal input terminal at ambient temperature and humidity after brake pack	
Dielectric Strength	Sufficient to withstand 1500V 50/60Hz applied between the power terminal and signal input terminal at ambient temperature and humidity after brake pack running at rated speed for 1min	

1. Connection of brake pack is different according to the output and usage of motor.
   - A Diagram : Motors with output power 25W or less
   - B Diagram : Motors with output torque over 60W or motors with output torque less than 40W with short cycle braking (more than once per 5 seconds)
2. Be careful since there is a high voltage on some terminals.

✚ SCHEMATIC DIAGRAM OF INDUCTION MOTOR

▼ A Diagram

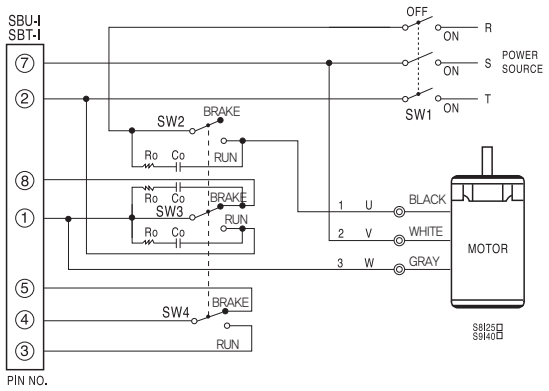

※ Note : Use external resistor R(30Ω, 20W)

SWITCH NO.	SWITCH CONTACT	REMARK
SW1	AC 250V 5A or more	
SW2	AC 250V 5A or more	Should be operating at same time
SW3	DC 20V 10mA	
R:braking current	30Ω 50W (EXTERNAL RESISTOR FOR BRAKING)	B DIAGRAM=EXTERNAL RESISTOR 30Ω20W
Ro,Co (SPARK KILLER)	Ro=5~200Ω Co=0.1~0.2μF 250WV	

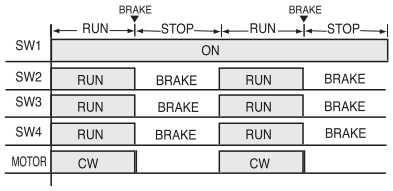

OPERATION/INSTANTANEOUS STOP

■ When switch SW2, SW3 and SW4 are flipped to "RUN", the motor begins to rotate. When these switches are flipped to "STOP", the motor stops instantaneously. Braking current runs through the motor winding for approximately 0.4 seconds and the power is cut automatically.

DIRECTION OF ROTATION

■ These diagrams all refer clockwise(CW) rotation as viewed from the front shaft end of the motor. To rotate the motor in a counter-clockwise(CCW), exchange U and V phase. Do not change the rotating direction for 0.4seconds after operating brake function.

SCHEMATIC DIAGRAM OF INDUCTION MOTOR

- Short cycle braking
- Output of 60W~90W

▼ B Diagram

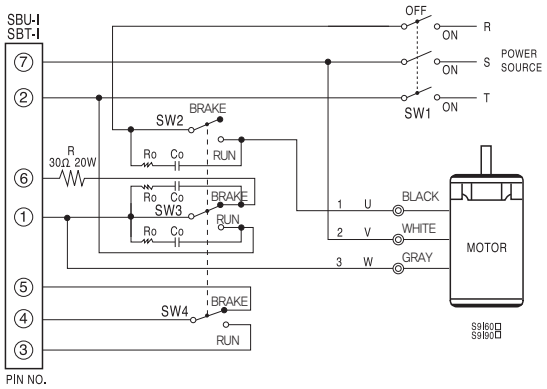

※ Note : Use external resistor R(30Ω, 20W)

SWITCH NO.	SWITCH CONTACT	REMARK
SW1	AC 250V 5A or more	
SW2, 3	AC 250V 5A or more	Should be operating at same time
SW4	DC 20V 10mA	
Rbraking current	30Ω 20W (EXTERNAL RESISTOR FOR BRAKING)	B DIAGRAM+EXTERNAL RESISTOR 30Ω20W
Ro,Co (SPARK KILLER)	Ro=5~200Ω Co=0.1~0.2μF 250WV	

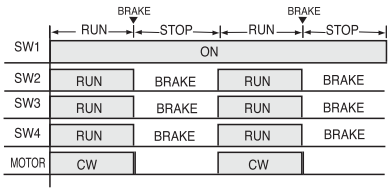

OPERATION/INSTANTANEOUS STOP

■ When switch SW2, SW3 and SW4 are flipped to "RUN", the motor begins to rotate. When these switches are flipped to "STOP", the motor stops instantaneously. Braking current runs through the motor winding for approximately 0.4 seconds and the power is cut automatically.

DIRECTION OF ROTATION

■ These diagrams all refer clockwise(CW) rotation as viewed from the front shaft end of the motor. To rotate the motor in a counter-clockwise(CCW), exchange U and V phase. Do not change the direction of rotation for 0.4seconds after operating brake function.

EXAMPLE OF BRAKING CHARACTERISTIC

Braking characteristics of induction motor are as shown below.

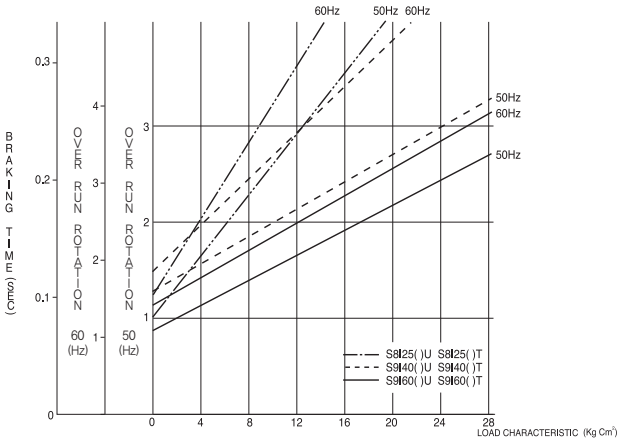

SWITCH STANDARD AND CONTACT POINT PROTECTION

■ Use power relay with wide contact point. If relay with narrow contact point is used on SW2 and SW3, circuit elements may be damaged by spark.(Contact point capacity AC 250V, over 7A) Use CR circuit for absorbing surge voltage to keep out spark.
※ Ro : 5~200Ω 1/4W over B
Co : 0.1~0.2μF over 250WV

OPERATION CYCLE AND LIMIT FOR CONTINUOUS OPERATION

■ Even when three-phase brake pack is used in short operating cycles such as inching operation, the motor can be stopped instantaneously. However, consider maximum load condition because for three phase motor, temperature may be changed according to the given load. When motor repeats starting and stopping in short cycle of more than one instantaneous stop per 5 seconds, the motor's temperature rises rapidly.
The temperature of the motor case should be maintained 90℃ or less regardless of operating cycles.

5 SBS-ICE

■ Take certification CE Mark
(FILE NO. E9766429E01. Certifi-organization : TÜV Rheinland)

SPECIFICATION

MODEL	SBS - ICE
Voltage & Frequency	Three-phase AC380-440V±10%, 50/60Hz
Applicated Motor	● INDUCTION MOTOR 25W~90W (external resistance needed)
Permissible Braking	3A or less
Braking Current Time	About 0.4sec
Ambient Temp	-10℃~+50℃
Ambient Humidity	85% or less (No condensing)
Insulation Resistance	100MΩ or more when 500V DC megger is applied between the power terminal and signal input terminal at ambient temperature and humidity after brake pack
Dielectric Strength	Sufficient to withstand 1800V 50/60Hz applied between the power terminal and signal input terminal at ambient temperature and humidity after brake pack running at rated speed for 1min

■ Caution
1. Connection of brake pack is different according to the output and usage of motor. 2. Be careful since there is high voltage on some terminals.

✚ DIMENSIONS

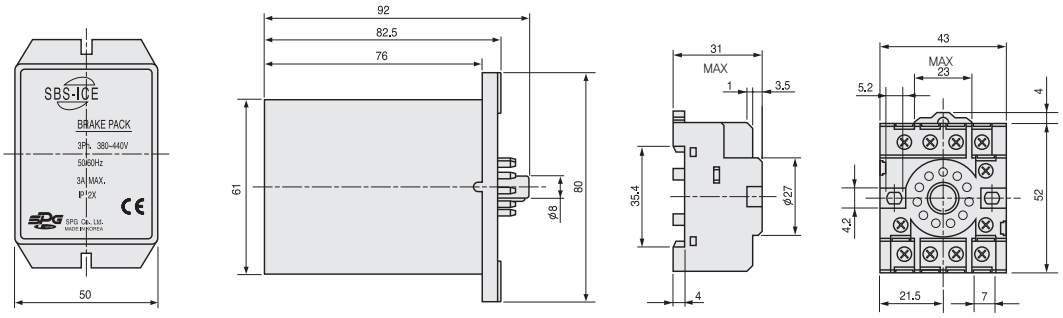

✚ SCHEMATIC DIAGRAM OF INDUCTION MOTOR

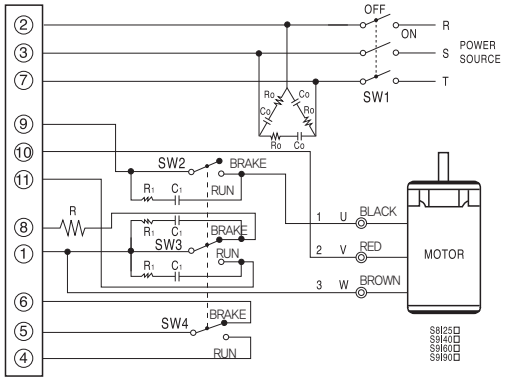

	RUN	STOP	RUN	STOP
SW1	ON			
SW2	RUN	BRAKE	RUN	BRAKE
SW3	RUN	BRAKE	RUN	BRAKE
SW4	RUN	BRAKE	RUN	BRAKE
MOTOR	CW		CW	

※ Note : Use external resistor R

SWITCH NO.	SWITCH CONTACT	REMARK
SW1	AC 500V 5A or more	
SW2, SW3	AC 500V 7A or more	Should be operating at same time
SW4	DC 20V 10mA	
R	50Ω 10W	Motor output 25~40W
	50Ω 20W	Motor output 60~90W
R_1, C_1	R_1 : 5 ~ 200Ω C_1: 0.1 ~ 0.2μF, 500VAC	
Ro, Co	R_0 : 27Ω, higher model than 5W C_0: 0.47μF, higher model than 500VAC	

Motor Output	Braking External Resistor
25W~40W	50Ω 10W
60W~90W	50Ω 20W

OPERATION/INSTANTANEOUS STOP

When switch SW2, SW3 and SW4 are flipped to "RUN", the motor begins to rotate. When these switches are flipped to "STOP", the motor stops instantaneously. Braking current runs through the motor winding for approximately 0.4 seconds and the power is cut automatically.

DIRECTION OF ROTATION

These diagrams all refer clock wise(CW) rotation as viewed from the front shaft end of the motor. To rotate the motor in a counter clockwise(CCW), exchange U and V phase. Don't change the direction of rotation for 0.4seconds after operating brake function.

SWITCH STANDARD AND CONTACT POINT PROTECTION

■ Use power relay with wide contact point. If relay with narrow contact point is used on SW2 and SW3, circuit elements may be damaged by spark. (Contact point capacity AC 250V, over 7A) Use CR circuit for absorbing surge voltage to keep out spark.
※ R_1 : 5~200Ω 1/4W over B
C_1 : 0.1~0.2μF over 500WV

■ Three-phase brake pack has noise filter inside. However, it can not remove noise perfectly. Please connect with Ro and Co.(See the Schematic Diagram) R_o, C_o spec is as follow.
※ R_o : 27Ω, 5W and more
C_o : 0.47μF, 500VAC and more

OPERATION CYCLE AND LIMIT FOR CONTINUOUS OPERATION

Even when three-phase brake pack is used in short operating cycles such as inching operation, the motor can be stopped instantaneously. However, consider maximum load condition because for three-phase motor, temperature may be changed according to the given load. When motor repeats starting and stopping in short cycle of more than one instantaneous stop per 5 seconds, Short cycle braking. The temperature of the motor case should be maintained 90℃ or less regardless of operating cycles.

BRAKE PACK
: NON CONTACT TYPE

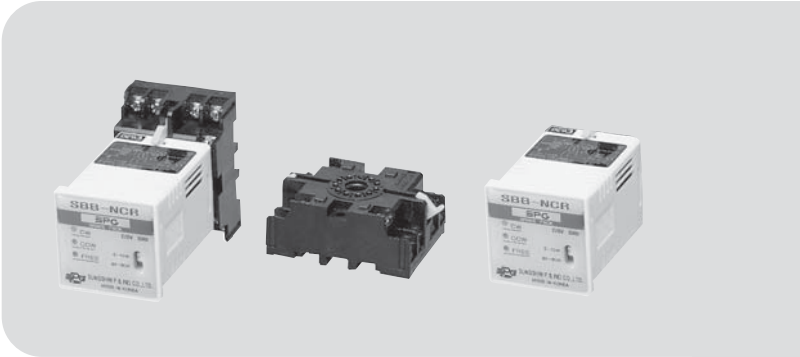

✚ DIMENSIONS

▼ BRAKE PACK

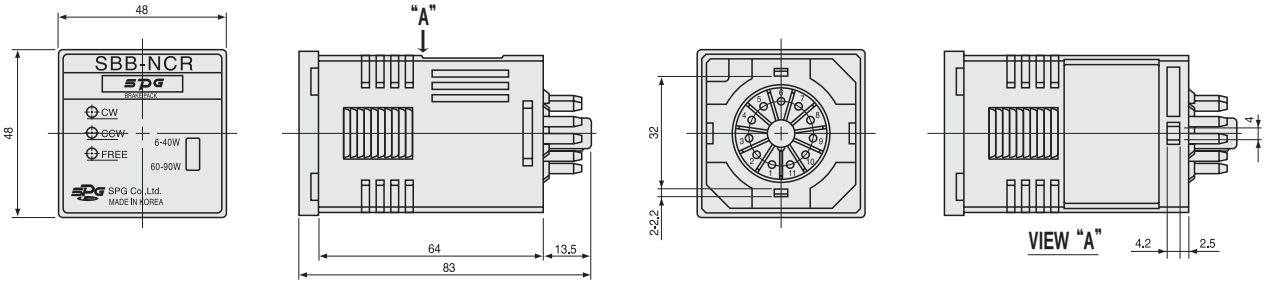

▼ SOCKET

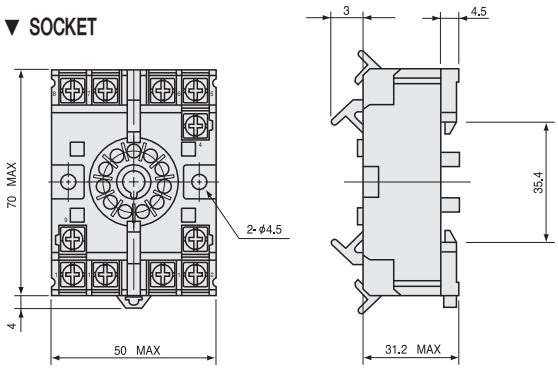

● **Feature**

1. SBA-NCR, SBB-NCR, SBC-NCR, SBD-NCR, SBX-NCR are non contact type brake pack for induction motor. For reversible motor, there is a non contact type brake pack.
2. To control the motor, connecting socket(11pin) and direct current for signal (12-24V over 0.1A) as well as brake pack is needed.

SPECIFICATION

MODEL	SBA-NCR	SBB-NCR	SBC-NCR	SBD-NCR	SBX-NCR
Voltage	Single-phase 110V±10%	Single phase 220V±10%	Single phase 100V±10%	Single phase 200V±10%	Single phase 200V~240±10%
Frequency	60Hz		50/60Hz		50Hz
Applicated Motor	INDUCTION MOTOR & REVERSIBLE MOTOR (6~90W)				
Signal Input	DC 12V~DC 24V(±10%) PHOTO COUPLER INPUT CW, CCW, FREE				
Ambient Temp	-10℃~+40℃				
Ambient Humidity	85% or less (No condensing)				
Insulation Resistance	100MΩ or more when 500V DC megger is applied between the power terminal and signal input terminal at ambient temperature and humidity after brake pack				
Dielectric Strength	Sufficient to withstand 1500V 50/60Hz applied between the power terminal and signal input terminal at ambient temperature and humidity after brake pack running at rated speed for 1min				

LED DISPLAY

1. LED display

CW	Lights when CW signals are input
CCW	Lights when CCW signals are input
FREE	Lights when FREE signals are input

2. Switches for changing output of motor

6~40W ■ 60~90W □	switch position of 6W~40W motor 6W, 15W, 25W, 40W
6~40W □ 60~90W ■	switch position of 60W~90W motor 60W, 90W

Set to 60W~90W when shipped.

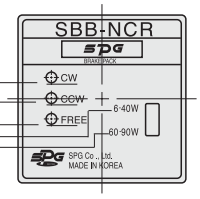

APPLICATION MOTOR

MODEL	VOLTAGE	MOTOR TYPE
SBA-NCR	SINGLE-PHASE 110V	INDUCTION MOTOR 6W~90W REVERSIBLE MOTOR 6W~90W
SBC-NCR	SINGLE-PHASE 100V	
SBB-NCR	SINGLE-PHASE 220V	
SBD-NCR	SINGLE-PHASE 200V	
SBX-NCR	SINGLE-PHASE 220V~240V	
SBA-ENCR	SINGLE-PHASE 110V	ELECTROMAGNETIC BRAKE MOTOR 6W~90W
SBC-ENCR	SINGLE-PHASE 100V	
SBB-ENCR	SINGLE-PHASE 220V	
SBD-ENCR	SINGLE-PHASE 200V	
SBX-ENCR	SINGLE-PHASE 220V~240V	

CONNECTION AND SETTING

1. 6~40W INDUCTION MOTOR, REVERSIBLE MOTOR change output switch to 6~40W
2. 60~90W INDUCTION MOTOR, REVERSIBLE MOTOR change output switch to 60~90W

SYSTEM LAYOUT

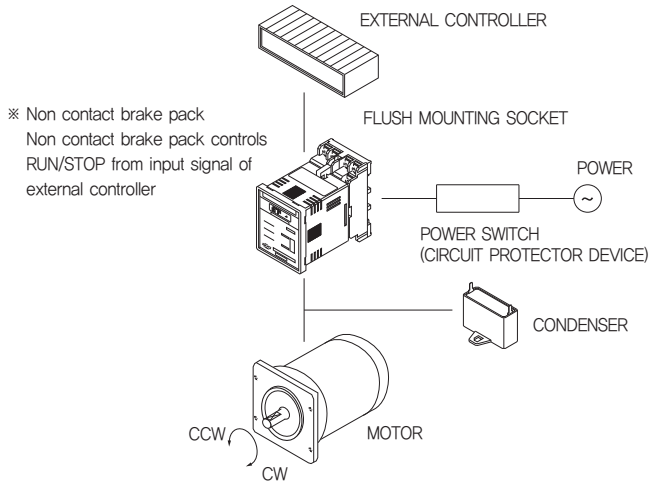

● Notes on Operation

1. Motor Operation Cycle

If the motor is actually loaded, use the motor while its surface temperature is 90˚C or less . Especially, the frequent repetition of instantaneous stop and start raises the motor temperature.

MOTOR OUTPUT	OPERATION CYCLE
6~25W	more 2sec
40~90W	more 4sec

※ 1sec run / 1sec stop per 2sec cycle.
※ 2sec run / 2sec stop per 4sec cycle.

2. Capacity of Protection

If the motor brakes instantaneously, half-wave current flows about 0.2 ~ 0.4 seconds.
Refer to the table below when choosing the capacity of a protection circuit.

● Brake Current

Unit : [A]

MOTOR OUTPUT	110V 60Hz	220V 60Hz	100V 50Hz	100V 60Hz	200V 50Hz	200V 60Hz	220/240V 50Hz
6W	1.2	0.4	1.2	1.2	0.5	0.4	0.6
15W	3.1	1.5	3.1	3.1	1.7	1.5	1.7
25W	7.5	3.3	7.4	7.4	3.4	3.2	3.5
40W	12.0	4.2	12.2	12.2	5.4	4.2	6.6
60W	11.8	6.4	14.2	11.6	8.1	6.2	8.4
90W	16.5	7.9	17.4	16.4	10.4	8.0	10.6

APPLICATION BRAKE PACK : SBA-NCR, SBB-NCR, SBC-NCR, SBD-NCR

■ APPLICATION MOTOR

1ØINDUCTION MOTOR 6W
1ØINDUCTION MOTOR TERMINAL BOX TYPE 6W~90W

▽ CW operation input

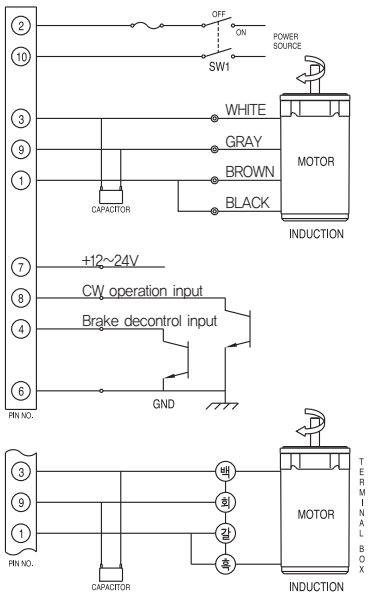

▽ CCW operation input

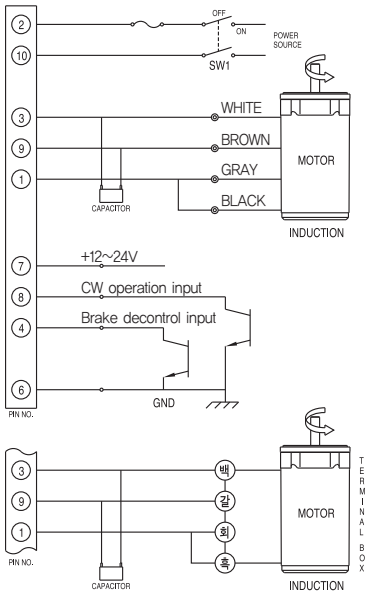

■ APPLICATION MOTOR

1ØREVERSIBLE MOTOR 6W
1ØREVERSIBLE MOTOR TERMINAL BOX TYPE 6W~90W

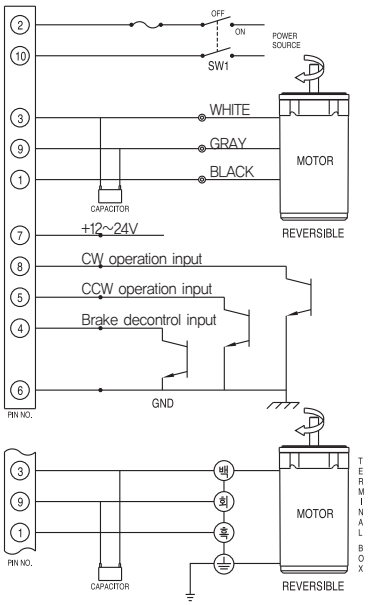

■ APPLICATION MOTOR

1ØINDUCTION MOTOR 15W~90W

▽ CW operation input

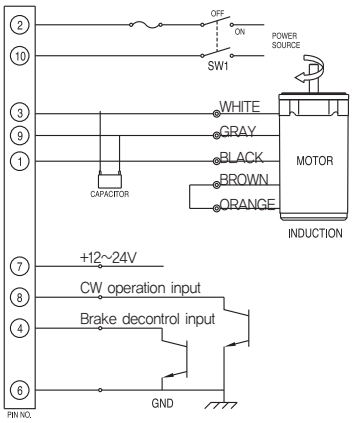

▽ CCW operation input

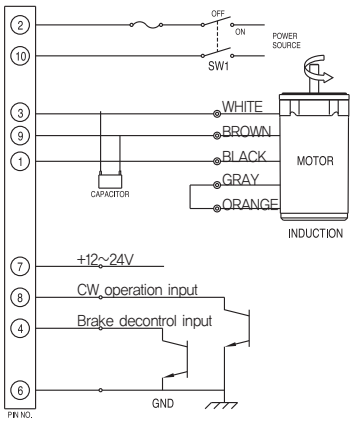

APPLICATION BRAKE PACK : SBX-NCR

■ APPLICATION MOTOR

1∅INDUCTION MOTOR 6W~90W
1∅INDUCTION MOTOR TERMINAL BOX TYPE 6W~90W

▽ CW operation input

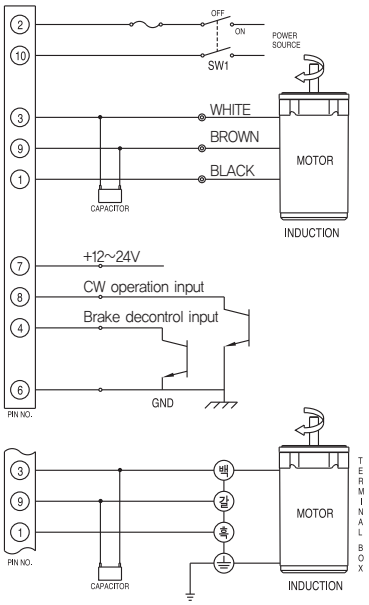

▽ CCW operation input

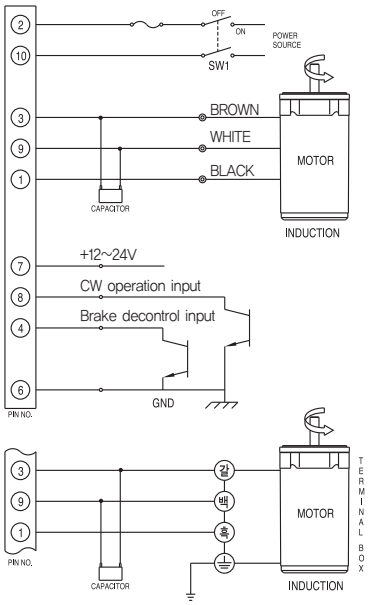

■ APPLICATION MOTOR

1∅REVERSIBLE MOTOR 6W~90W
1∅REVERSIBLE MOTOR TERMINAL BOX TYPE 6W~90W

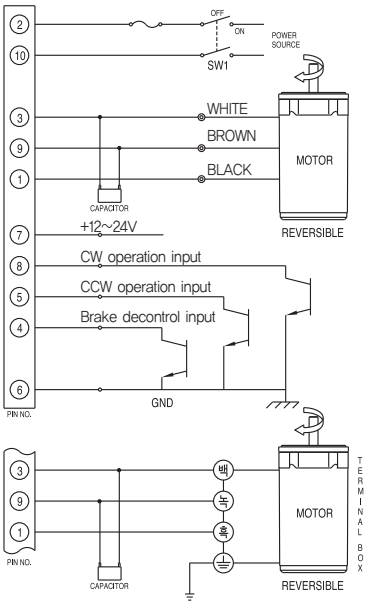

APPLICATION BRAKE PACK : SBA-ENCR, SBB-ENCR, SBC-ENCR, SBD-EN

■ APPLICATION MOTOR

1∅ELECTROMAGNETIC BRAKE MOTOR 6W~90W

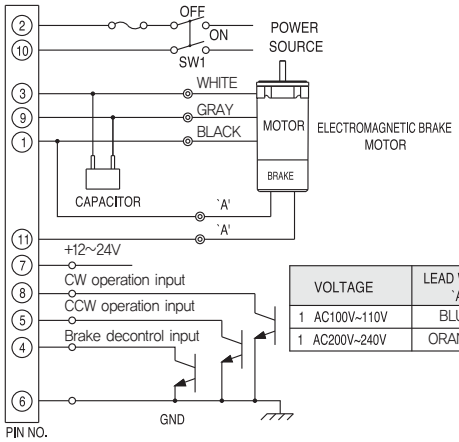

VOLTAGE	LEAD WIRE `A'
1 AC100V~110V	BLUE
1 AC200V~240V	ORANGE

APPLICATION BRAKE PACK : SBX-ENCR

■ APPLICATION MOTOR

1∅ELECTROMAGNETIC BRAKE MOTOR 6W~90W

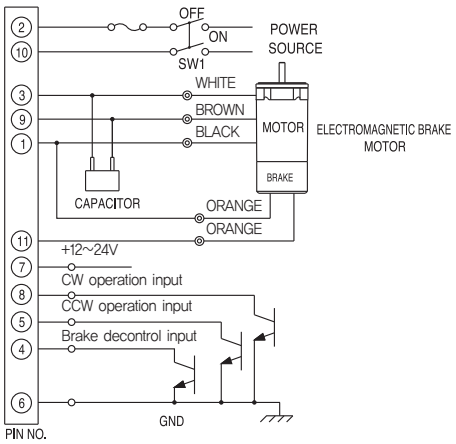

INPUT OF SIGNAL AND OPERATION

① Input of CW

When CW operation input is turned on, rotating direction is CW and when turned off, it will instantaneous stop. When connected as per diagram, it will turn CW and to turn CCW, change white and brown wire.

(for terminal box type motors change ② and ③). (However, for 220V~240V, 50Hz motor, change white and brown wire.

② Input of anti-braking

When anti-braking input is turned on, electromagnetic brake will not function, and if CW and CCW signal input is turn off, it will come to natural stop due to inertia force. If anti-braking input is off, electromagnetic brake will function and CW, CCW are off as well, motor will come to instantaneous stop. Electromagnetic brake will automatically terminate its function after stopping

CAUTION

1. When connecting brake pack and external controller, shortest distance connection is highly recommended.
2. Wire with thickness of 0.75mm or more recommended.
3. AC lead wire(Terminal NO ①②③⑨⑩) and signal lead wire(④⑤⑥⑦⑧) have at least 10cm distance.
4. Be careful not to solder the brake pack's terminal pin directly.
5. When brake is to be connected, be sure to check the terminal number.
6. The power switch must be turned off when inserting the brake to a socket.
7. To prevent malfunctions, earth pin No.6 terminal when instant brake is required for CW or CCW operations.

8. Example of Operation

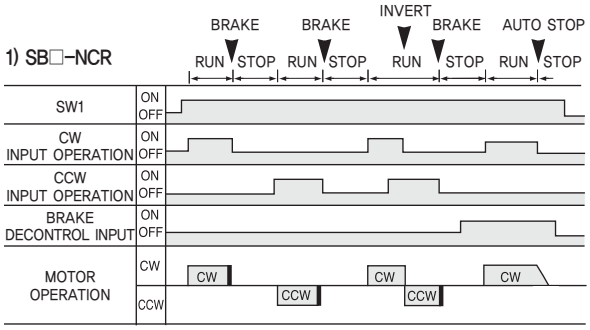

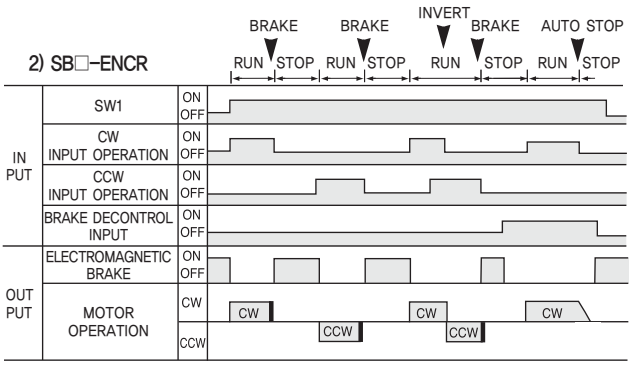

SPG MOTOR

DIGITAL SPEED INDICATOR

INDEX

SID250 306

DIGITAL SPEED INDICATOR

Features of digital speed indicator

- It is rotating speed display that indicating the rotation speed of motor and the rotation speed of gear head's output shaft.
- Input voltage is free voltage from AC 100V to 240V.
- The reduction rate and multiplication magnification for gear head can be set.
- The returning speed for belt conveyor can be converted.
- RPM can be indicated according to the input of 12 pulse/ 15 pulse/ 24 pulse/ 30 pulse by 1 RPM.
  Application : UNIT / SR / SS / X-TOR Series
  ※ Not specified product.

SID250

SPECIFICATIONS

Item \ Nomenclature	SID250
Rated voltage	Single Phase 100V ~ 240V 50Hz/60Hz
Operating voltage range	Single Phase 85V ~ 264V 50Hz/60Hz
Consumption Voltage	0.1A
Rotating speed indication	4-DIGIT
Setting reduction rate	116 types and multiplication magnification(0.005 unit)
Operating caution temperature	0 ~ 40℃
Weight	200g
Insulated resistance	In the normal temperature and humidity, values measured by mega between power input terminal and FG, power input terminal and case, case and FG terminal, are above 100 MΩ.
Insulated internal pressure	In the normal temperature and humidity, power between power input terminal and FG, power input terminal and case, case and FG terminal, shall be approved for 1 minute.

DIMENSIONS

DIGITAL SPEED INDICATOR

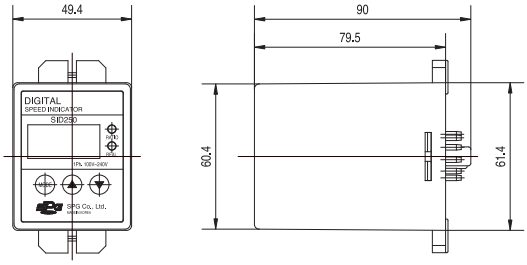

FOR INSTALLING THE ADAPTOR

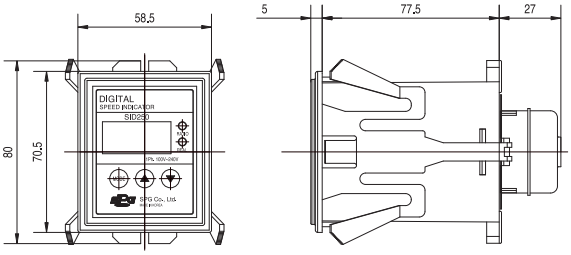

Panel machining diagram

[unit:mm]

Panel thickness : 1㎜~3.2㎜

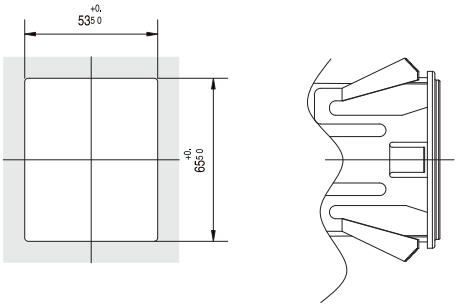

Socket for installing DIN rail

(Deliberately purchase)

MODEL : SB11-H

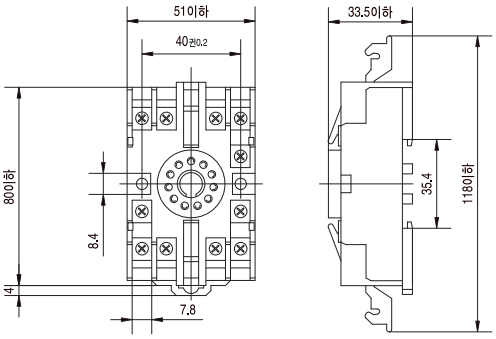

Electrical Wiring

UNIT Series

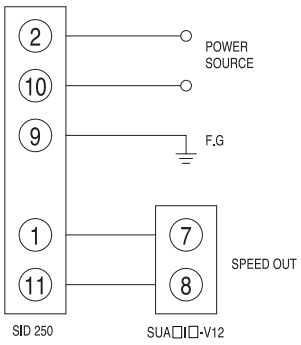

SR Series

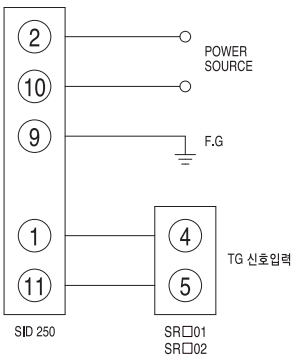

SR CE Series

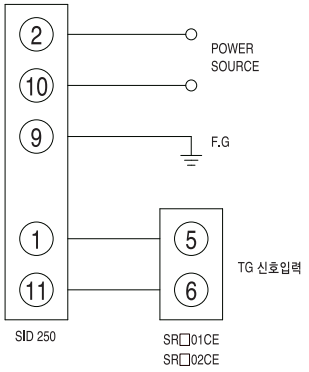

SS Series

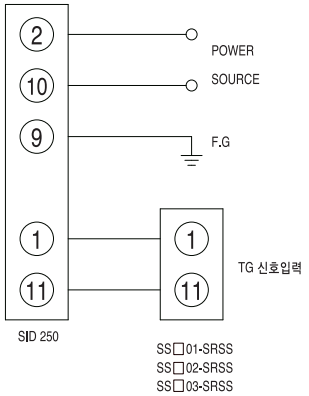

X-TOR Series (12pulse / rpm)

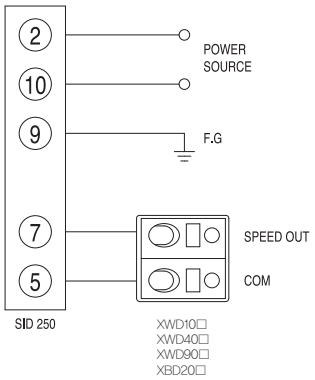

X-TOR Series (15pulse / rpm)

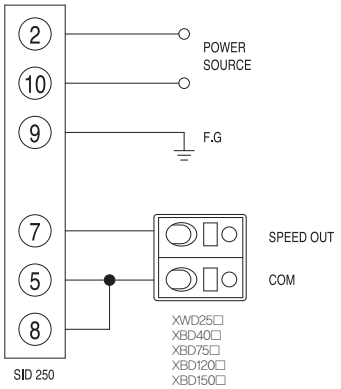

12pulse signal input (open collector)

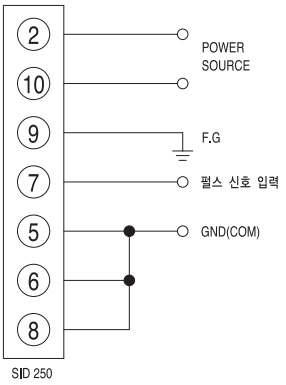

30pulse signal input (open collector)

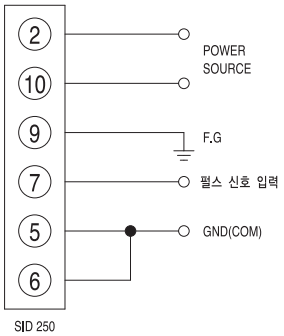

OPTION

INDEX

Mounting Plate for Motor & Gearhead 310

Extension Cable 314

Surge Absorber 314

External Speed Controller 315

Braking External Resistor 315

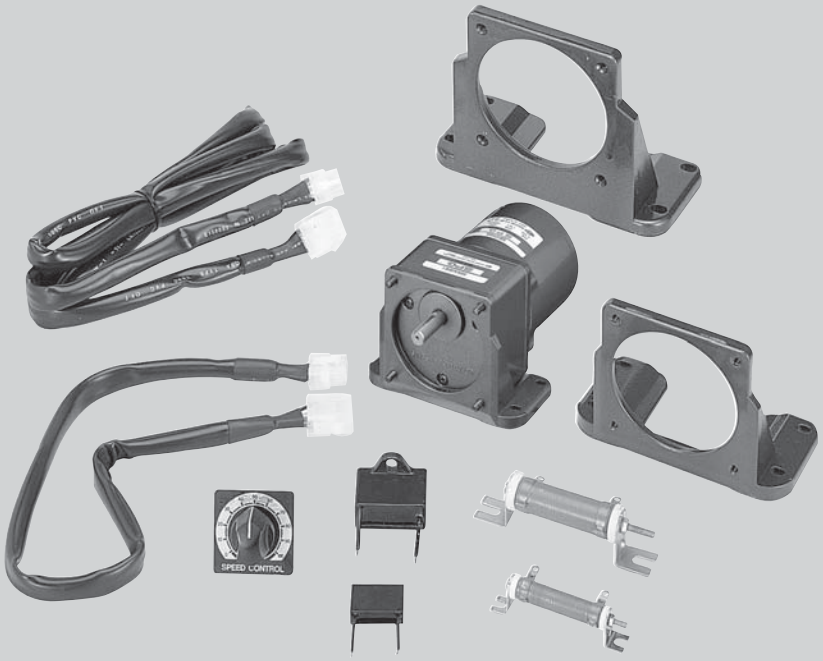

Mounting Plate for Motor & Gearhead

□60㎜

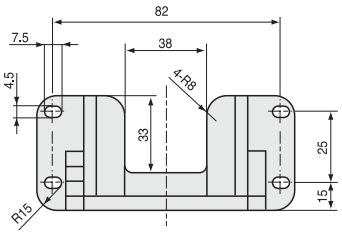

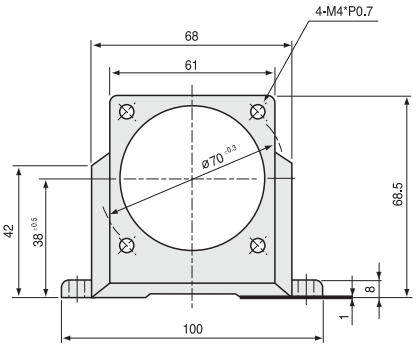

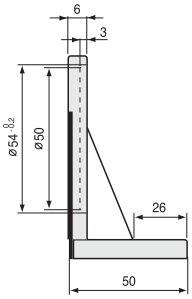

- **MODEL : SPL-6A**

  WEIGHT 45g, MATERIAL Al

- **APPLICATION ITEMS**

  GEARHEAD : S6□A

  MOTOR : S6□06

□70㎜

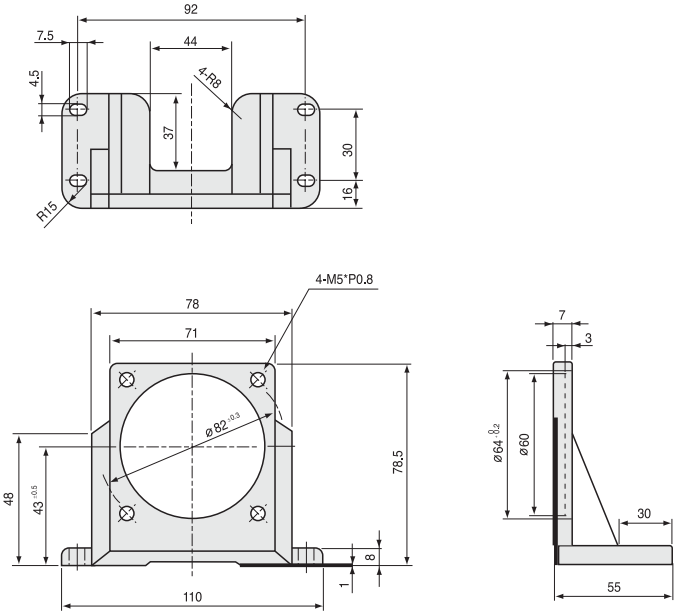

- **MODEL : SPL-7A**

  WEIGHT 75g, MATERIAL Al

- **APPLICATION ITEMS**

  GEARHEAD : S7□A
  MOTOR : S7□15

□80㎜

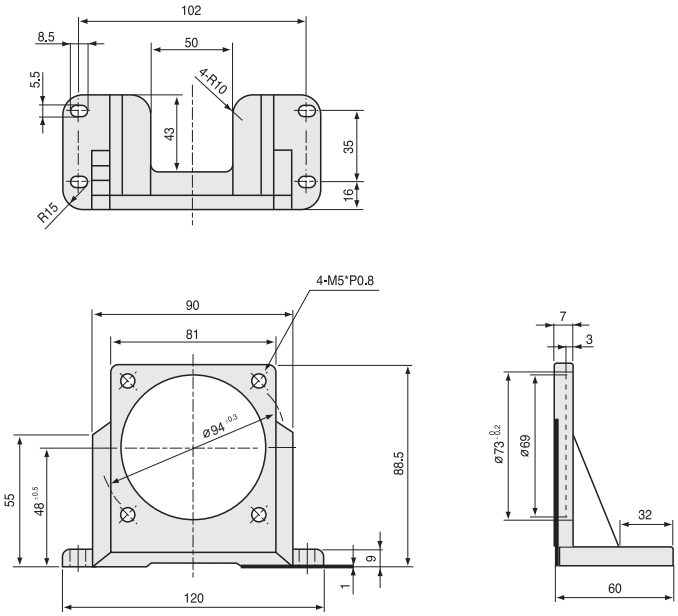

- **MODEL : SPL-8A**

  WEIGHT 120g, MATERIAL Al

- **APPLICATION ITEMS**

  GEARHEAD : S8□A
  MOTOR : S8□(15, 25)

□90㎜

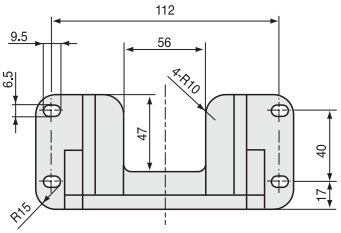

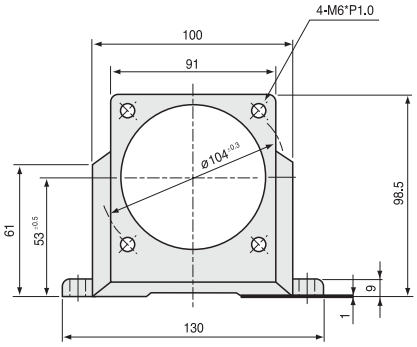

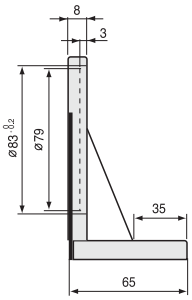

- **MODEL : SPL-9A**

  WEIGHT 140g, MATERIAL Al

- **APPLICATION ITEMS**

  GEARHEAD : S9□A
  MOTOR : S9□40~200

□90㎜

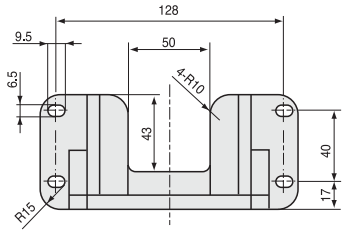

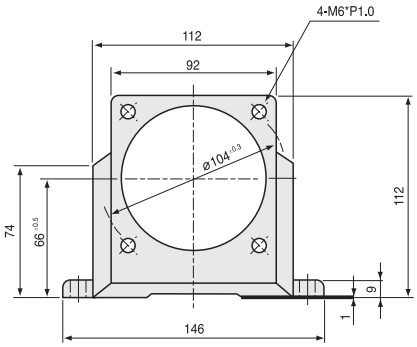

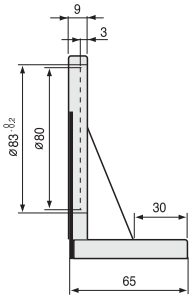

- **MODEL : SPL-9SA**

  WEIGHT 270g, MATERIAL Al

- **APPLICATION ITEMS**

  GEARHEAD : S9□C(L,H)
  GEARHEAD : S9□B(L,H)
  MOTOR : S9□40~200(L, H)

  When needed stronger mounting plate.

□90㎜

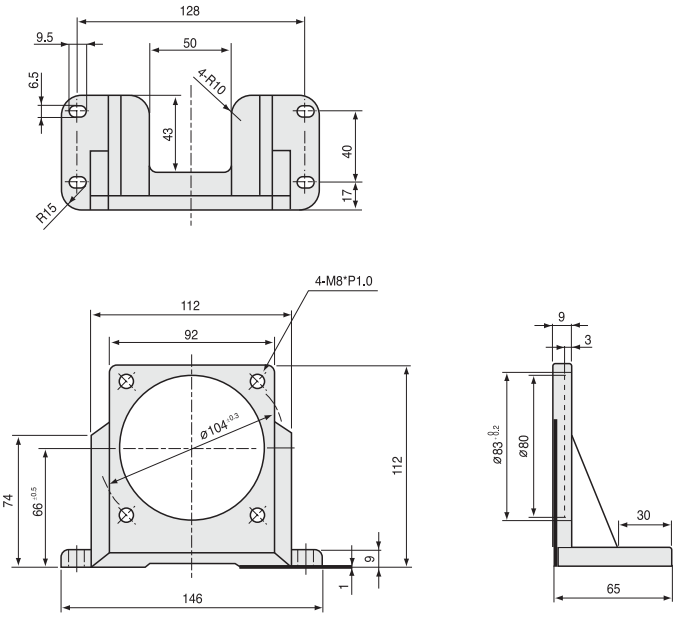

- **MODEL : SPL-9SB**

  WEIGHT 270g, MATERIAL Al

- **APPLICATION ITEMS**

  GEARHEAD : S9□D□B, S9□H□B

EXTENSION CABLE

- Use the extension cable between speed control motor and controller unit.
- Sold separately.
- Controller unit has 0.5m built-in cable. Additional purchase of extension cable is possible if required.
- Refer to the below table, for the length of extension cable and the name of model.

DIMENSION [Unit : mm]

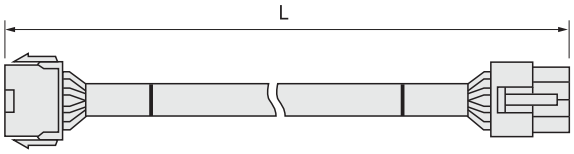

MODEL NAME

MODEL NAME	LENGTH OF EXTENSION CABLE
SOEW-05	0.5m
SOEW-10	1.0m
SOEW-15	1.5m
SOEW-20	2.0m
SOEW-30	3.0m
SOEW-40	4.0m
SOEW-50	5.0m

SURGE ABSORBER

- Contact protector of relay switch used to operate direction of the motor and/or braking circuit.
- Sold separately.

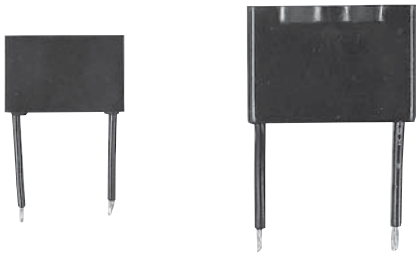

DIMENSION [Unit : mm]

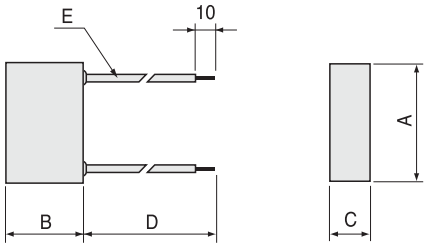

MODEL Name and Dimension

MODEL	VOLTAGE	RESISTANCE	CAPACITOR	DIMENSION (㎜)				E (LEAD WIRE)
				A	B	C	D	
SK1202-25	AC 250V	120Ω	0.2uF	26.0	16.5	8.5	200	UL1007 AWG #22
SK1202-50	AC 500V	120Ω	0.2uF	36.0	25.0	16.0	200	UL1015 AWG #20

EXTERNAL SPEED CONTROLLER

- Built-in 1 set of external speed controller in SS Type controller of speed control pack by parts.
- A speed controller is installed in SR Type controller, thus it can institute and control speed. Remote operation kits available for purchase.
- Additional speed controllers are available for purchase if multi-stage speed control is required.
- Sold separately

DIMENSION [Unit : mm]

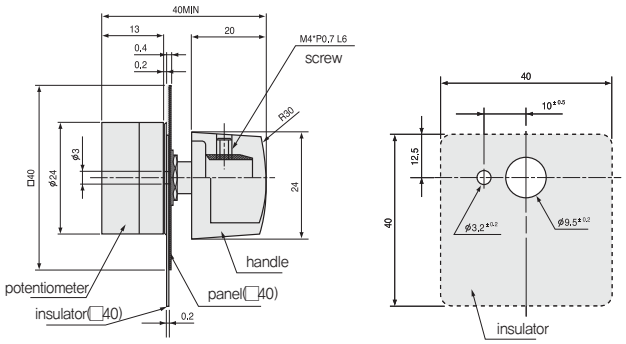

MODEL NAME AND EXTERIOR DIMENSION

MODEL NAME	CHARACTERISTIC
SVR10KH	10KΩ, 1/4W · B Characteristic
SVR20KH	20KΩ, 1/4W · B Characteristic

※Note) SVR10KH (10KΩ, 1/4W · B SPEC) have only application to SS type speed controller which is 220~240V, 50Hz.

BRAKING EXTERNAL RESISTOR

- It should be used for instantaneous function in speed control pack and high power motor(over 60W).
- sold separately

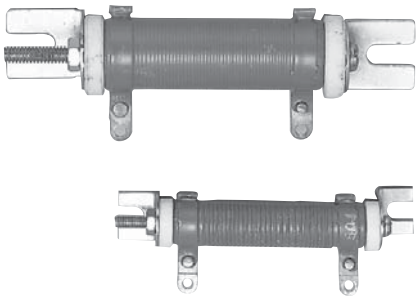

DIMENSION [Unit : mm]

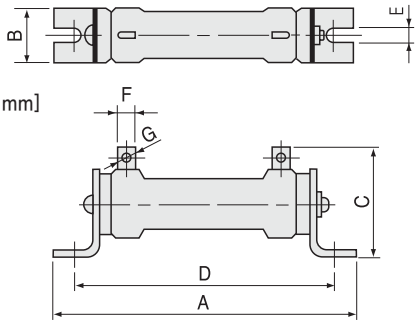

MODEL NAME

MODEL	RESISTANCE (Ω)	RATEDPOWER (W)	DIMENSION(㎜)							APPLICABLE PACK	OPERATING CONDITIONS
			A	B	C	D	E	F	G		
SR05H10	5	10	77	14	26	67	3.5	5	2.2	SR TYPE	INSTANTANEOUS STOP
SR10H10	10	10	77	14	26	67	3.5	5	2.2	SS TYPE	INSTANTANEOUS STOP
SR50H10	50	10	77	14	26	67	3.5	5	2.2	SBS-ICE	25W, 40W
SR30H20	30	20	91	22	35	75	4.5	5	2.2	SBT(U)-I	60W, 90W
SR50H20	50	20	91	22	35	75	4.5	5	2.2	SBB(D)-IR	90W
										SBS-ICE	60W, 90W
SR30H50	30	50	139	32	55	113	6.2	7	2.8	SBA(C)-IR	60W, 90W