■ PCS TYPE DIMENSIONS [Lead wire Box Type]

UNIT = mm

22 Frame

PCS22①-5~60-MA020②

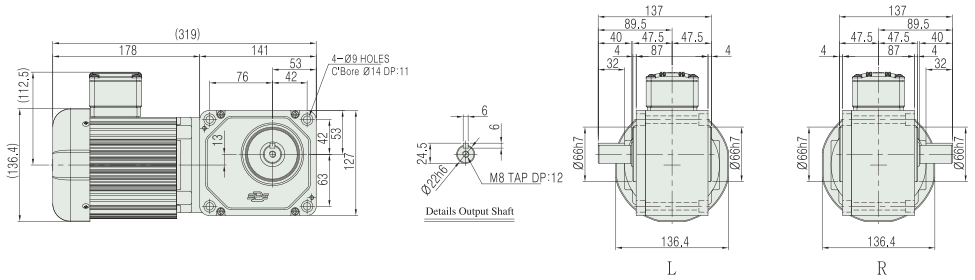

Weight : 9.5 Kg

28 Frame

PCS28①-80~240-MA020②

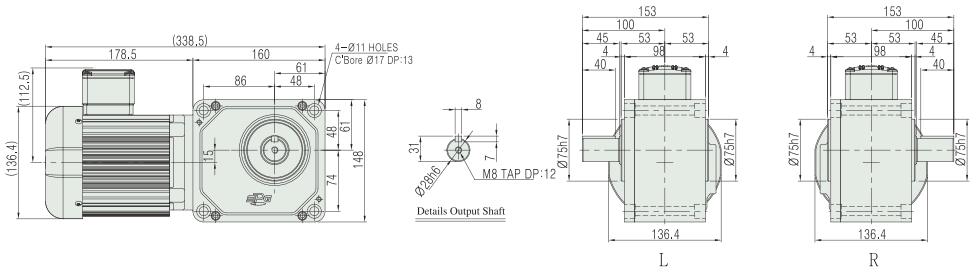

Weight : 12 Kg

■ PCS TYPE DIMENSIONS [Terminal Box Type]

Note) • Dimensions for IP40 model and IP55 model are the same.
• The brake-attached model is applied to the Terminal Box Type for basic features, but does not apply to the lead wire box type.
• () dimension and weight in dimensions is for brake attached model specification

UNIT = mm

22 Frame

PCS22①-5~60-M①020②

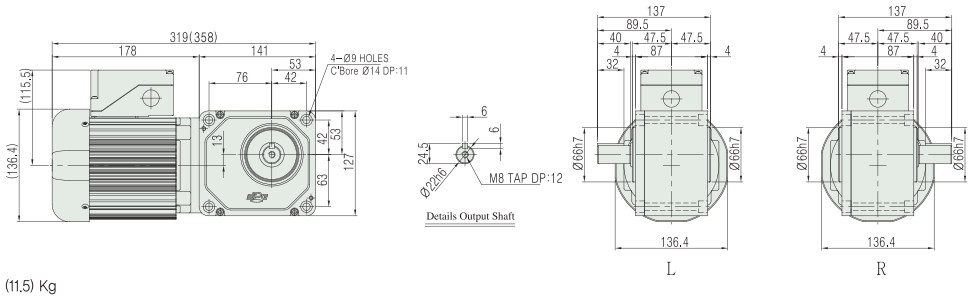

Weight : 9.5 (11.5) Kg

28 Frame

PCS28①-80~240-M①020②

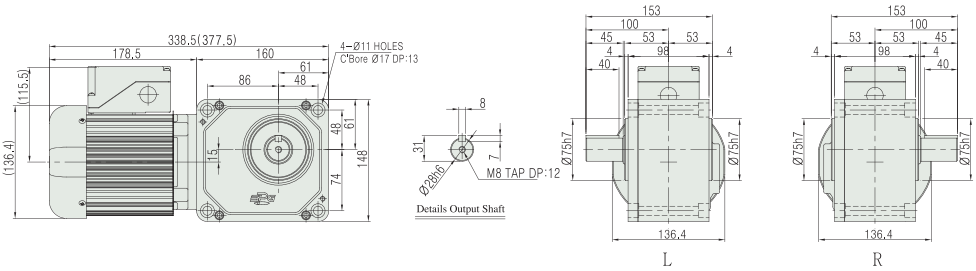

Weight : 12 (14) Kg

• **Model type** ① : Motor option (B, C, D)
② : Power (Voltage & Frequency)

Model Name Coding ➡ 36Page
Specification for output shaft ➡ 70Page
Technological Data ➡ 101Page

PCS Series 3-Phase 0.4kW

■ SPECIFICATION

■ MOTOR

Output (kW)	Model Name	Poles	Voltage (V)	Freq. (Hz)	Rated Load			Duty	Degrees of protection	Insulation Classification	Protective Cooling System
					Current (A)	Speed (r/min)	Efficency (%)				
0.4	PCS□□-□-M□040R4□	4	220/380	60	2.00/1.20	1730	74.1	CONT.	IP55	F	Totally Enclosed Fan-Cooled
	PCS□□-□-M□040W6□	4	200	50	2.20	1450	74.2				
			200/220	60	1.80/1.90	1735/1745	76.4/75.7				
	PCS□□-□-M□040X6□	4	380/400	50	1.10/1.10	1425/1430	75.5/74.1				
			400/440	60	1.00/1.00	1710/1725	75.4/75.2				

- The Brake Geared Motor is divided into 2 models: one is a non-water proof product with IP40 while the other is a waterproof product with IP55.
- The Models with IP40 and IP55 have the same electric characteristics.

■ GEARED MOTOR - 50Hz

Frame No.		28											32					
Reduction gear ratio		5	7.5	10	12.5	15	20	25	30	40	50	60	80	100	120	160	★200	★240
Rotation speed (r/min)		300	200	150	120	100	75	60	50	37.5	30	25	18.8	15	12.5	9.4	7.5	6.3
Allowable torque	kgf · m	1.10	1.70	2.29	2.85	3.40	4.50	5.60	6.79	8.99	11.3	13.6	17.6	22.1	26.5	32.7	32.7	35.6
	N · m	10.8	16.7	22.5	27.9	33.3	44.1	54.9	66.6	88.2	111	133	173	217	260	321	321	349
Allowable O.H.L	kgf	200	225	250	265	280	310	330	340	360	360	360	380	380	380	380	380	380
	N	1960	2205	2450	2597	2744	3038	3234	3332	3528	3528	3528	3724	3724	3724	3724	3724	3724

■ GEARED MOTOR - 60Hz

Frame No.		28											32					
Reduction gear ratio		5	7.5	10	12.5	15	20	25	30	40	50	60	80	100	120	160	★200	★240
Rotation speed (r/min)		360	240	180	144	120	90	72	60	45	36	30	22.5	18	15	11.3	9	7.5
Allowable torque	kgf · m	0.92	1.41	1.90	2.35	2.79	3.79	4.70	5.70	7.49	9.39	11.3	14.8	18.4	22.1	27.3	27.3	29.6
	N · m	9.02	13.8	18.6	23	27.4	37.2	46.1	55.9	73.5	92.1	111	145	180	217	268	268	290
Allowable O.H.L	kgf	200	225	250	265	280	310	330	340	360	360	360	380	380	380	380	380	380
	N	1960	2205	2450	2597	2744	3038	3234	3332	3528	3528	3528	3724	3724	3724	3724	3724	3724

Note) • Permissible Torque is limited for products with a mark "★" of reduction gear ratio
• Permissible O.H.L (allowable overhung load) is based on the central part of the outlet length for output shaft
• Rotation direction of color ■ is opposite of other color □
• Self Locking is unavailable.

Model Name Coding ➡ 36Page
Specification for output shaft ➡ 70Page
Technological Data ➡ 101Page

■ PCS TYPE DIMENSIONS [Lead wire Box Type]

UNIT = mm

28 Frame

PCS28①-5~60-MA040②

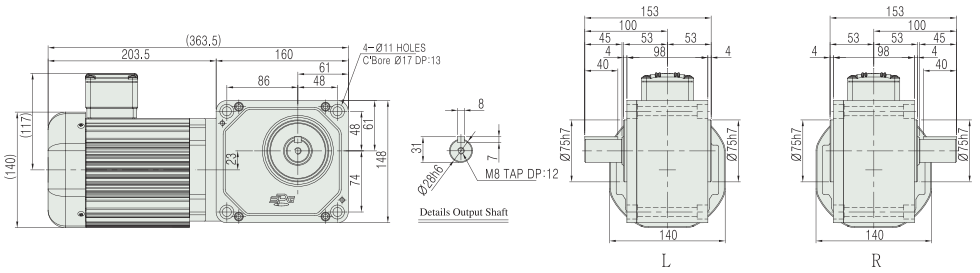

Weight : 14.5 Kg

32 Frame

PCS32①-80~240-MA040②

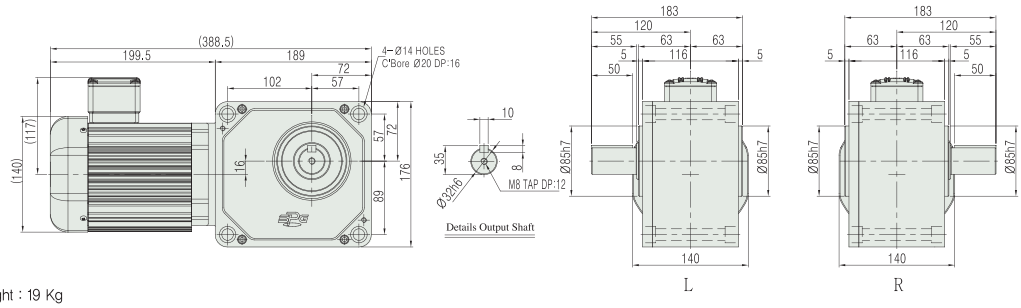

Weight : 19 Kg

■ PCS TYPE DIMENSIONS [Terminal Box Type]

Note) • Dimensions for IP40 model and IP55 model are the same.
• The brake-attached model is applied to the Terminal Box Type for basic features, but does not apply to the lead wire box type.
• () dimension and weight in dimensions is for brake attached model specification

UNIT = mm

28 Frame

PCS28①-5~60-M①040②

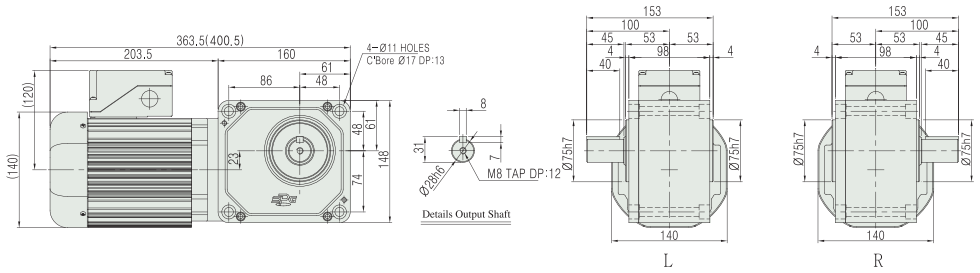

Weight : 14.5 (16) Kg

32 Frame

PCS32①-80~240-M①040②

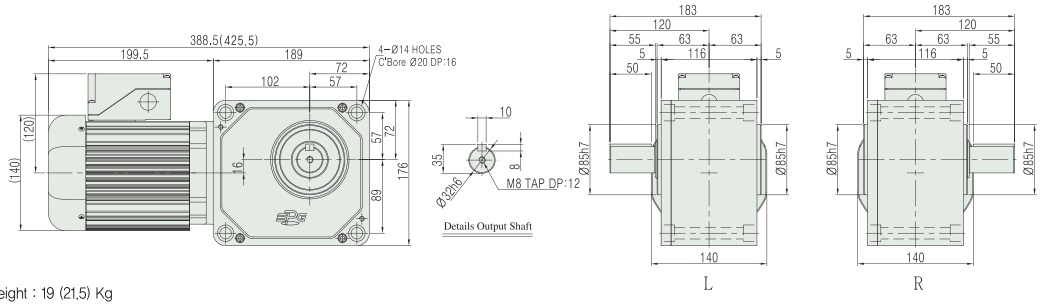

Weight : 19 (21.5) Kg

• **Model type** ① : Motor option (B, C, D)
② : Power (Voltage & Frequency)

Model Name Coding ➡ 36Page
Specification for output shaft ➡ 70Page
Technological Data ➡ 101Page

High Efficiency

PCS Series 3-Phase 0.75kW

■ SPECIFICATION

■ MOTOR

Output (kW)	Model Name	Poles	Voltage (V)	Freq. (Hz)	Rated Load			Duty	Degrees of protection	Insulation Classification	Protective Cooling System
					Current (A)	Speed (r/min)	Efficency (%)				
0.75	PCS□□-□-E□075R4□	4	220/380	60	3.10/1.80	1705	82.8	CONT.	IP55	F	Totally Enclosed Fan-Cooled
	PCS□□-□-E□075W6□	4	200	50	3.45	1415	79.6				
			220	60	3.10	1710	83.5				
	PCS□□-□-E□075X6□	4	380/400	50	1.80/1.80	1420/1425	79.6/79.6				
			400/440	60	1.65/1.60	1700/1720	82.5/82.9				

- The Brake Geared Motor is divided into 2 models: one is a non-water proof product with IP40 while the other is a waterproof product with IP55.
- The Models with IP40 and IP55 have the same electric characteristics.

■ GEARED MOTOR - 50Hz

Frame No.		32											40					
Reduction gear ratio		5	7.5	10	12.5	15	20	25	30	40	50	60	80	100	120	160	★200	★240
Rotation speed (r/min)		300	200	150	120	100	75	60	50	37.5	30	25	18.8	15	12.5	9.4	7.5	6.3
Allowable torque	kgf · m	2.10	3.15	4.20	5.30	6.39	8.49	10.6	12.6	16.9	21.2	25.4	33.1	41.4	49.7	61.4	61.4	65.5
	N · m	20.6	30.9	41.2	52	62.7	83.3	104	124	166	208	249	325	406	487	602	602	642
Allowable O.H.L	kgf	330	355	380	379	410	430	450	460	480	480	480	540	540	540	540	540	540
	N	3234	3479	3724	3721	4018	4214	4410	4508	4704	4704	4704	5292	5292	5292	5292	5292	5292

■ GEARED MOTOR - 60Hz

Frame No.		32											40					
Reduction gear ratio		5	7.5	10	12.5	15	20	25	30	40	50	60	80	100	120	160	★200	★240
Rotation speed (r/min)		360	240	180	144	120	90	72	60	45	36	30	22.5	18	15	11.3	9	7.5
Allowable torque	kgf · m	1.79	2.65	3.50	4.39	5.29	7.10	8.79	10.6	14.1	17.6	21.2	27.6	34.5	41.4	51.2	51.2	54.6
	N · m	17.6	26	34.3	43.1	51.9	69.6	86.2	104	138	173	208	271	338	406	502	502	535
Allowable O.H.L	kgf	330	355	380	379	410	430	450	460	480	480	480	540	540	540	540	540	540
	N	3234	3479	3724	3721	4018	4214	4410	4508	4704	4704	4704	5292	5292	5292	5292	5292	5292

Note)
- Permissible Torque is limited for products with a mark "★" of reduction gear ratio
- Permissible O.H.L (allowable overhung load) is based on the central part of the outlet length for output shaft
- Rotation direction of color ■ is opposite of other color □
- Self Locking is unavailable.

Model Name Coding ➡ 36Page
Specification for output shaft ➡ 70Page
Technological Data ➡ 101Page

■ PCS TYPE DIMENSIONS [Lead wire Box Type]

UNIT = mm

32 Frame

PCS32①-5~60-EA075②

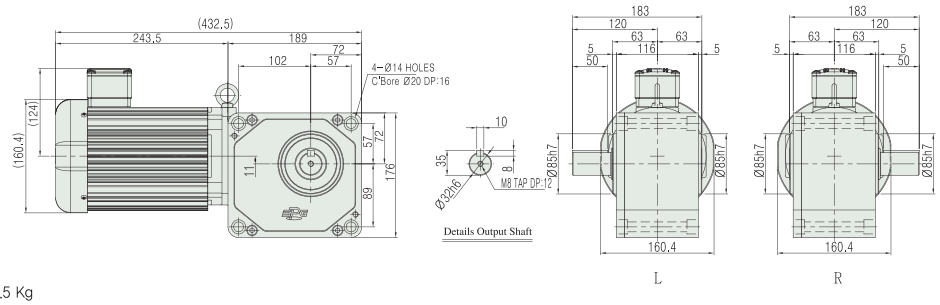

Weight : 22.5 Kg

40 Frame

PCS40①-80~240-EA075②

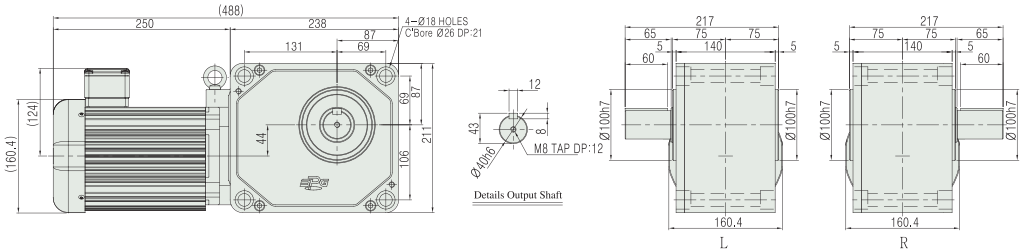

Weight : 33 Kg

■ PCS TYPE DIMENSIONS [Terminal Box Type]

Note) • Dimensions for IP40 model and IP55 model are the same.
• The brake-attached model is applied to the Terminal Box Type for basic features, but does not apply to the lead wire box type.
• () dimension and weight in dimensions is for brake attached model specification

UNIT = mm

32 Frame

PCS32①-5~60-E①075②

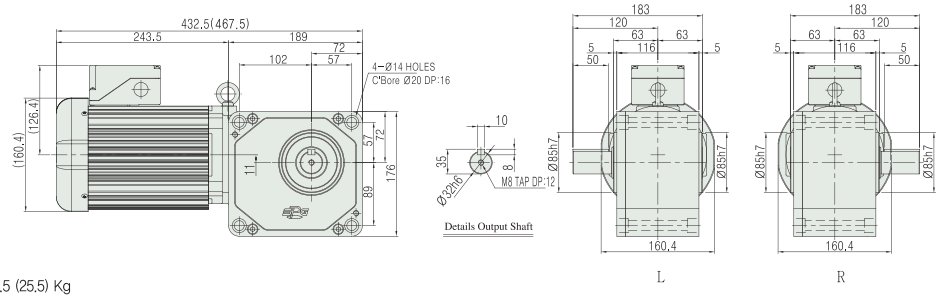

Weight : 22.5 (25.5) Kg

40 Frame

PCS40①-80~240-E①075②

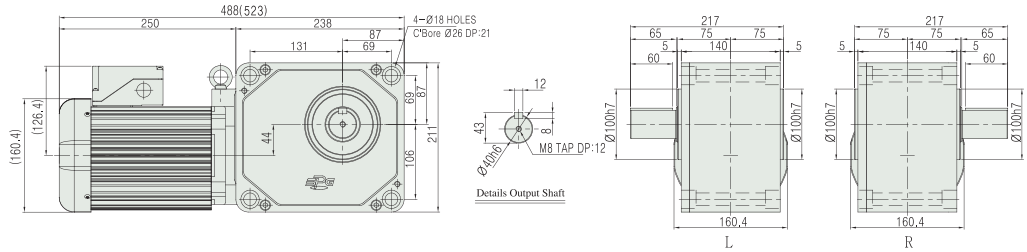

Weight : 33 (36) Kg

• **Model type** ① : Motor option (B, C, D)
② : Power (Voltage & Frequency)

Model Name Coding ➡ 36Page
Specification for output shaft ➡ 70Page
Technological Data ➡ 101Page