High Efficiency

P Series 3-Phase Foot(Leg) Mounted Type

3.7kW

■ SPECIFICATION

■ MOTOR

Frame No.	Output (kW)	Model Name	Poles	Voltage (V)	Freq. (Hz)	Duty	Rated Load					Degrees of protection	Insulation Classification	Protective Cooling System
							Current (A)	Speed (r/min)	Torque (kgf·cm)	Power Factor(p.u.)	Efficiency (%)			
112M	3.7	PEJK370-4R4L□□	4	220/380	60	CONT.	14.5/8.35	1750	205.9	0.76	87.6	IP55	F	Totally Enclosed Fan-Cooled

Note) • Foot (Leg) Mounted Type and Flange Mounted Type have the same specifications

■ PE-L Type DIMENSIONS [Foot(Leg) Mounted Type]

UNIT = mm

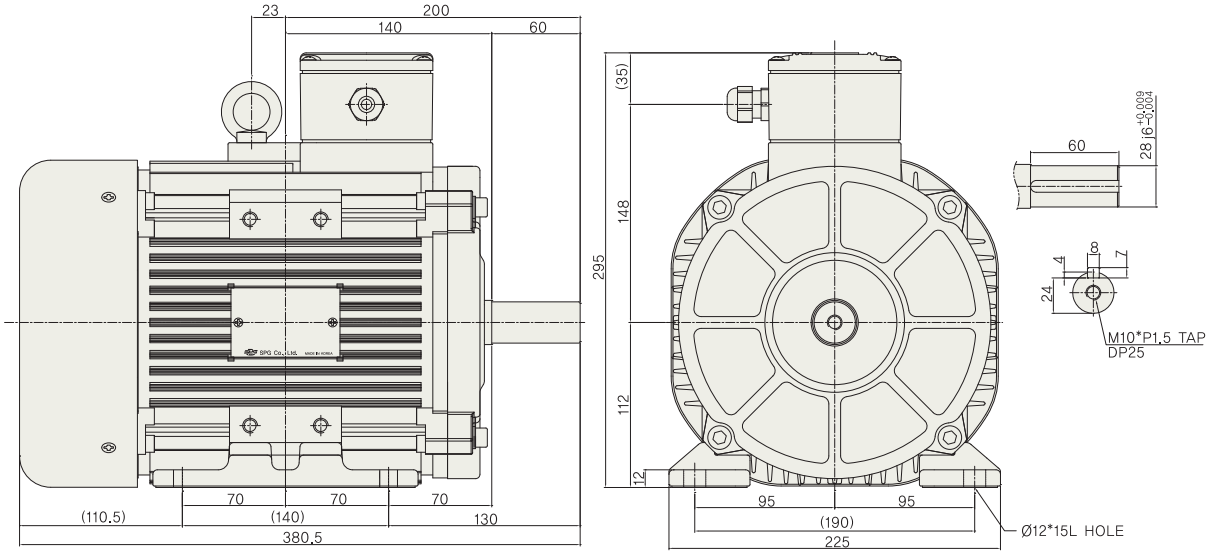

Note) • Key and Key groove tolerance : KS B 1311
• The total length of the products may vary depending on the mounting position of the discrete foot.
• ØD tolerance for output shaft : KS B 0401

Bearing No.		Weight
Load	Unload	
6206ZZ	6205ZZ	30kg

Model Name Coding ➡ 9Page
Specification for output shaft ➡ 30Page
Technological Data ➡ 101Page

MEMO

P Series FLANGE MOUNTED TYPE

▶ Output range : 3phase 0.2~3.7kW
▶ Range for high efficiency : 0.75~3.7kW

■ Product Coding

SERIES	EFFICIENCY	FRAME NO	OUTPUT		POLE	VOLTAGE	MOUNTING	TYPE	LOCATION
P	□	□	□	—	2&4	□	F	A&B	□

Motor Option		
A	**Lead wire Box Type** – Basic model without additional devices attached. Lead wires in the lead box to protect contact points. – Connect the lead wires provided on the motor to the power supply – Protection grade : IP55	
B	**Terminal Box Type** – Basic model without additional devices attached. A model with a built-in terminal strip in the lead box. – Connect power supply to the terminals to start operation – Protection grade : IP55	

P Series 3-Phase Flange Mounted Type

0.2kW

■ SPECIFICATION

■ MOTOR

Frame No.	Output (kW)	Model Name	Poles	Voltage (V)	Freq. (Hz)	Duty	Rated Loa]					Degrees of protection	Insulation Classification	Protective Cooling System
							Current (A)	Speed (r/min)	Torque (kgf·cm)	Power Factor(p.u.)	Efficiency (%)			
63M	0.2	PMAY020-2R4F□□	2	220/380	60	CONT.	1.20/0.70	3450	5.8	0.73	59.5	IP55	F	Totally Enclosed Fan-Cooled
		PMAY020-2U6F□□	2	230/400	50		1.10/0.65	2835	6.2	0.72	55.2			
				460	60		0.65	3435	6.0	0.73	56.6			
		PMAB020-4R4F□□	4	220/380	60		1.00/0.60	1634	12.0	0.74	71.4			
		PMAB020-4U6F□□	4	230/400	50		0.85/0.50	1360	13.0	0.78	69.0			
				460	60		0.50	1680	11.5	0.82	75.0			

Note) • Foot (Leg) Mounted Type and Flange Mounted Type have the same specifications
• Actual rated power for voltage U6 model is 0.18kW at 230V/400V 50Hz and 0.21kW at 460V 60Hz

■ PM-F Type DIMENSIONS [Flange Mounted Type]

UNIT = mm

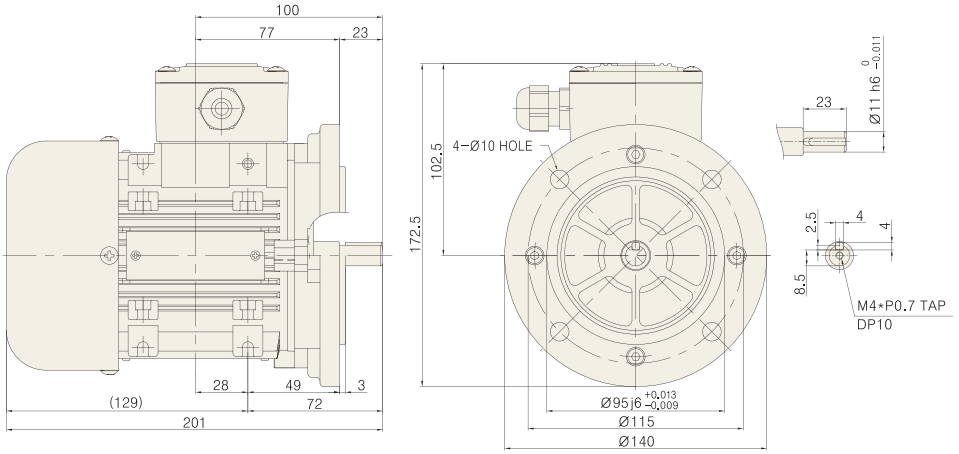

Note) • Key and Key groove tolerance : KS B 1311
• ØD tolerance for output shaft : KS B 0401

Bearing No.		Weight
Load	Unload	
6202ZZ	6202ZZ	4.35kg

Model Name Coding ➡ 9Page
Specification for output shaft ➡ 30Page
Technological Data ➡ 101Page

P Series 3-Phase Flange Mounted Type

0.4kW

■ SPECIFICATION

■ MOTOR

Frame No.	Output (kW)	Model Name	Poles	Voltage (V)	Freq. (Hz)	Duty	Rated Load					Degrees of protection	Insulation Classification	Protective Cooling System
							Current (A)	Speed (r/min)	Torque (kgf·cm)	Power Factor(p.u.)	Efficiency (%)			
71M	0.4	PMCB040-2R4F□□	2	220/380	60	CONT.	2.10/1.20	3480	11.2	0.73	69.4	IP55	F	Totally Enclosed Fan-Cooled
		PMCB040-2U6F□□	2	230/400	50		1.80/1.05	2895	12.5	0.71	70.8			
				460	60		1.05	3490	12.0	0.74	70.5			
		PMCB040-4R4F□□	4	220/380	60		2.00/1.20	1730	22.5	0.73	73.6			
		PMCB040-4U6F□□	4	230/400	50		1.50/0.90	1405	25.5	0.80	72.0			
				460	60		0.90	1695	24.5	0.83	73.0			

Note) • Foot (Leg) Mounted Type and Flange Mounted Type have the same specifications
• Actual rated power for voltage U6 model is 0.37kW at 230V/400V 50Hz and 0.43kW at 460V 60Hz

■ PM-F Type DIMENSIONS [Flange Mounted Type]

UNIT = mm

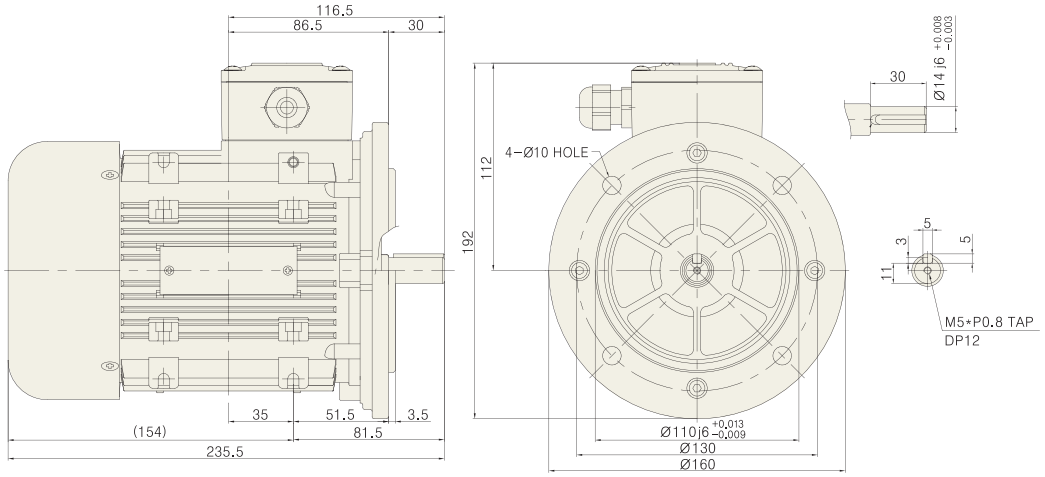

Note) • Key and Key groove tolerance : KS B 1311
• ØD tolerance for output shaft : KS B 0401

Bearing No.		Weight
Load	Unload	
6203ZZ	6203ZZ	6.43kg

Model Name Coding ➡ 9Page
Specification for output shaft ➡ 30Page
Technological Data ➡ 101Page

High Efficiency

P Series 3-Phase Flange Mounted Type

0.75kW

■ SPECIFICATION

■ MOTOR

Frame No.	Output (kW)	Model Name	Poles	Voltage (V)	Freq. (Hz)	Duty	Rated Load					Degrees of protection	Insulation Classification	Protective Cooling System
							Current (A)	Speed (r/min)	Torque (kgf·cm)	Power Factor(p.u.)	Efficiency (%)			
80M	0.75	PEEF075-2R4F□□	2	220/380	60	CONT.	3.25/1.88	3450	21.1	0.78	76.1	IP55	F	Totally Enclosed Fan-Cooled
		PEEH075-2U6F□□	2	230/400	50		3.20/1.85	2885	25.3	0.75	77.4			
				460	60		1.80	3470	23.8	0.76	76.1			
		PEEJ075-4R4F□□	4	220/380	60		3.10/1.80	1705	42.5	0.75	83.2			
		PEEJ075-4U6F□□	4	230/400	50		3.05/1.75	1415	51.3	0.76	79.6			
				460	60		1.70	1700	48.9	0.79	82.6			

Note) • Foot (Leg) Mounted Type and Flange Mounted Type have the same specifications
• Actual rated power for voltage U6 model is 0.75kW at 230V/400V 50Hz and 0.86kW at 460V 60Hz

■ PE-F Type DIMENSIONS [Flange Mounted Type]

UNIT = mm

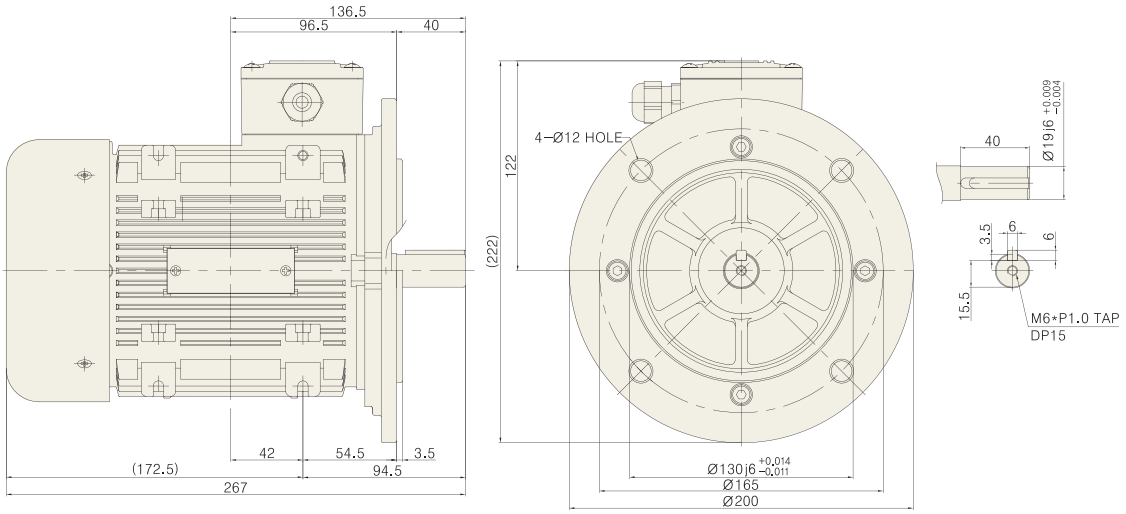

Note) • Key and Key groove tolerance : KS B 1311
• ØD tolerance for output shaft : KS B 0401

Bearing No.		Weight
Load	Unload	
6204ZZ	6203ZZ	11.7kg

Model Name Coding ➡ 9Page
Specification for output shaft ➡ 30Page
Technological Data ➡ 101Page

High Efficiency

P Series 3-Phase Flange Mounted Type

1.5kW

■ SPECIFICATION

■ MOTOR

Frame No.	Output (kW)	Model Name	Poles	Voltage (V)	Freq. (Hz)	Duty	Rated Load					Degrees of protection	Insulation Classification	Protective Cooling System
							Current (A)	Speed (r/min)	Torque (kgf·cm)	Power Factor(p.u.)	Efficiency (%)			
90L	1.5	PEGD150-2R4F□□	2	220/380	60	CONT.	5.50/3.20	3500	41.7	0.82	85.0	IP55	F	Totally Enclosed Fan-Cooled
		PEGD150-2U6F□□	2	230/400	50		5.70/3.30	2885	48.9	0.76	81.3			
				460	60		3.25	3450	49.4	0.80	84.9			
		PEGJ150-4R4F□□	4	220/380	60		6.15/3.55	1755	82.9	0.77	85.0			
		PEGJ150-4U6F□□	4	230/400	50		5.90/3.40	1455	99.9	0.76	82.8			
				460	60		3.30	1745	97.1	0.78	85.0			

Note) • Foot (Leg) Mounted Type and Flange Mounted Type have the same specifications
• Actual rated power for voltage U6 model is 1.5kW at 230V/400V 50Hz and 1.75kW at 460V 60Hz

■ PE-F Type DIMENSIONS [Flange Mounted Type]

UNIT = mm

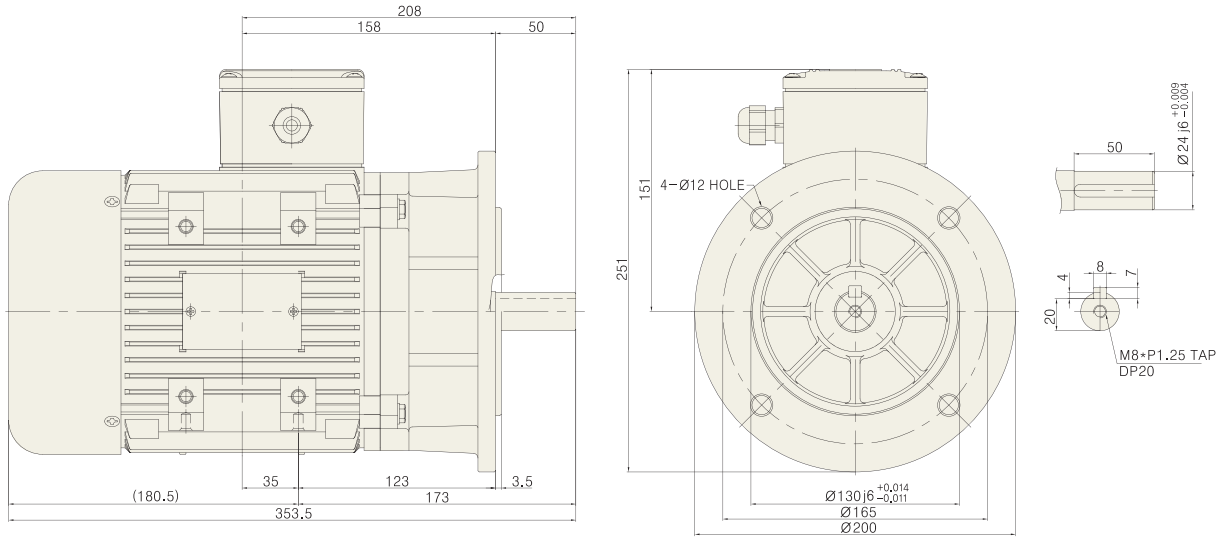

Note) • Key and Key groove tolerance : KS B 1311
• ØD tolerance for output shaft : KS B 0401

Bearing No.		Weight
Load	Unload	
6205ZZ	6204ZZ	19.5kg

Model Name Coding ➡ 9Page
Specification for output shaft ➡ 30Page
Technological Data ➡ 101Page

High Efficiency

P Series 3-Phase Flange Mounted Type

2.2kW

■ SPECIFICATION

■ MOTOR

Frame No.	Output (kW)	Model Name	Poles	Voltage (V)	Freq. (Hz)	Duty	Rated Load					Degrees of protection	Insulation Classification	Protective Cooling System
							Current (A)	Speed (r/min)	Torque (kgf·cm)	Power Factor(p.u.)	Efficiency (%)			
90L	2.2	PEGI220-2R4F□□	2	220/380	60	CONT.	8.10/4.70	3520	60.9	0.80	86.6	IP55	F	Totally Enclosed Fan-Cooled
		PEGI220-2U6F□□	2	230/400	50		9.60/4.40	2900	74.0	0.84	83.2			
				460	60		4.30	3490	71.4	0.86	86.6			
100L		PEHN220-4R4F□□	4	220/380	60		7.80/4.50	1750	121.6	0.83	88.8			
		PEHN220-4U6F□□	4	230/400	50		7.80/4.50	1460	145.5	0.80	84.3			
				460	60		4.40	1750	140.1	0.81	88.8			

Note) • Foot (Leg) Mounted Type and Flange Mounted Type have the same specifications
• Actual rated power for voltage U6 model is 2.2kW at 230V/400V 50Hz and 2.55kW at 460V 60Hz

■ PE-F Type DIMENSIONS [Flange Mounted Type]

UNIT = mm

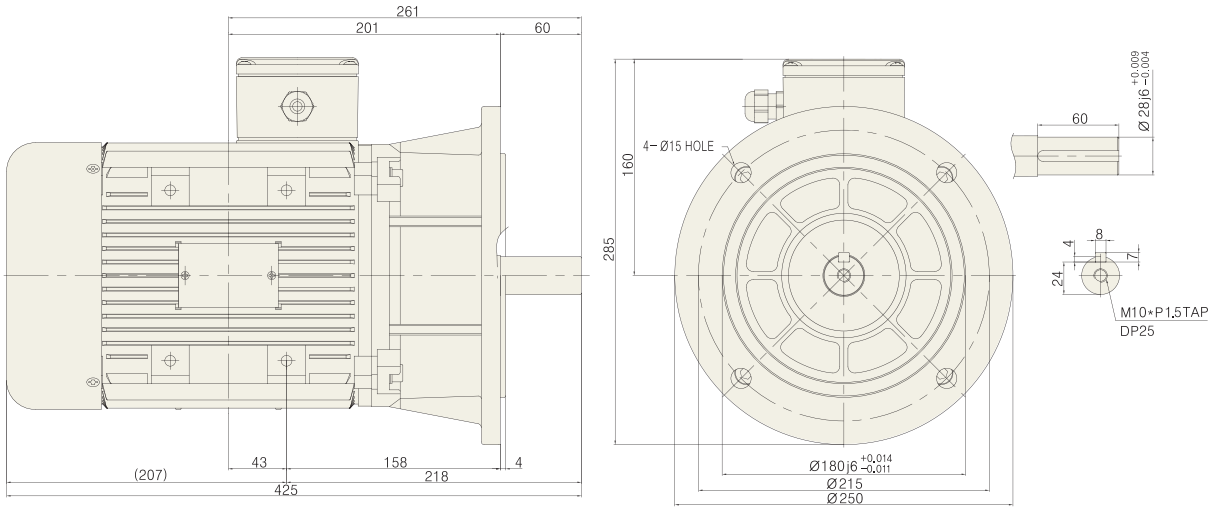

Note) • Key and Key groove tolerance : KS B 1311
• ØD tolerance for output shaft : KS B 0401

Bearing No.		Weight
Load	Unload	
6206ZZ	6205ZZ	29.7kg

Model Name Coding ➡ 9Page
Specification for output shaft ➡ 30Page
Technological Data ➡ 101Page

High Efficiency

P Series 3-Phase Flange Mounted Type

3.7kW

■ SPECIFICATION

■ MOTOR

Frame No.	Output (kW)	Model Name	Poles	Voltage (V)	Freq. (Hz)	Duty	Rated Load					Degrees of protection	Insulation Classification	Protective Cooling System
							Current (A)	Speed (r/min)	Torque (kgf·cm)	Power Factor(p.u.)	Efficiency (%)			
112M	3.7	PEJK370-4R4F□□	4	220/380	60	CONT.	14.50/8.35	1750	205.9	0.76	87.6	IP55	F	Totally Enclosed Fan-Cooled

Note) • Foot (Leg) Mounted Type and Flange Mounted Type have the same specifications

■ PE-F Type DIMENSIONS [Flange Mounted Type]

UNIT = mm

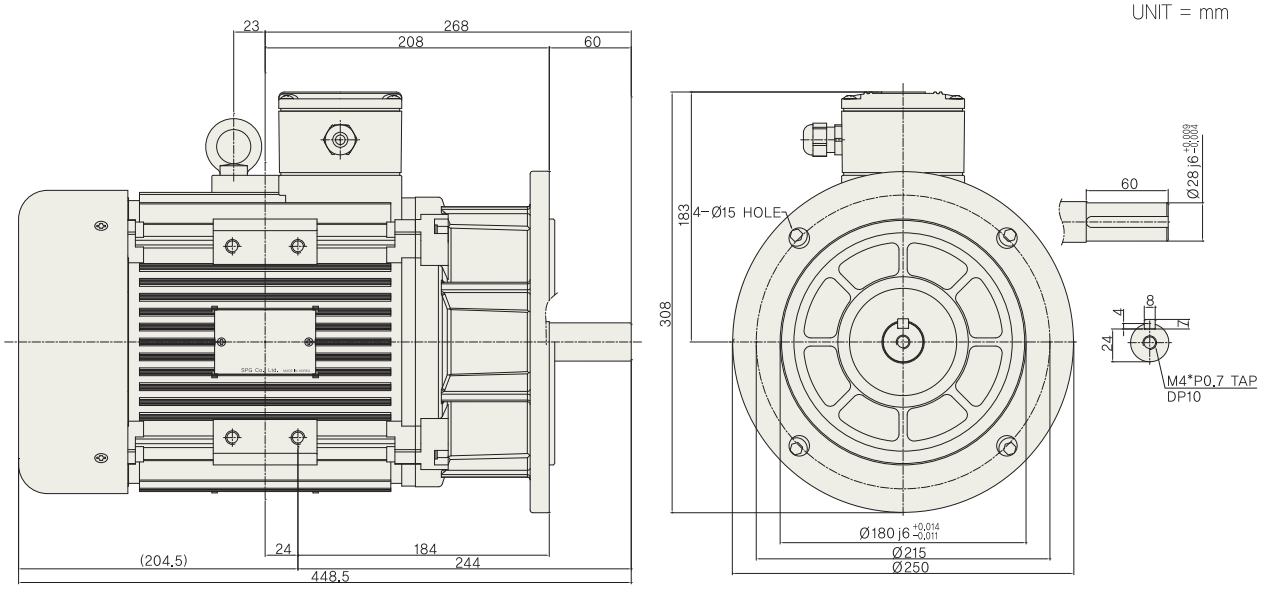

Note) • Key and Key groove tolerance : KS B 1311
• ØD tolerance for output shaft : KS B 0401

Bearing No.		Weight
Load	Unload	
6206ZZ	6205ZZ	33kg

Model Name Coding ➡ 9Page
Specification for output shaft ➡ 30Page
Technological Data ➡ 101Page

MEMO